REMOTE 8-BIT I²C AND SMBus I/O EXPANDER WITH INTERRUPT OUTPUT AND CONFIGURATION REGISTERS

FEATURES

- I²C to Parallel Port Expander
- Open-Drain Active-Low Interrupt Output
- Operating Power-Supply Voltage Range of 2.3 V to 5.5 V
- 5-V Tolerant I/Os
- 400-kHz Fast I²C Bus
- Three Hardware Address Pins Allow up to Eight Devices on the I²C/SMBus
- Input/Output Configuration Register
- Polarity Inversion Register
- Internal Power-On Reset
- Power-Up With All Channels Configured as Inputs
- No Glitch on Power Up
- Latched Outputs With High-Current Drive Maximum Capability for Directly Driving LEDs
- Latch-Up Performance Exceeds 100 mA Per JESD 78, Class II
- ESD Protection Exceeds JESD 22
  - 2000-V Human-Body Model (A114-A)
  - 200-V Machine Model (A115-A)
  - 1000-V Charged-Device Model (C101)

DB, DBQ, DGV, DW, OR PW PACKAGE (TOP VIEW)

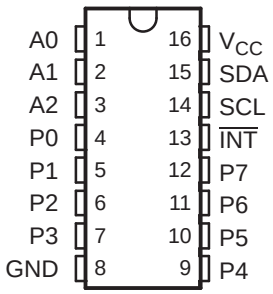

RGV PACKAGE (TOP VIEW)

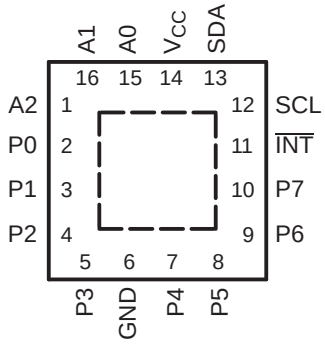

RGT PACKAGE (TOP VIEW)

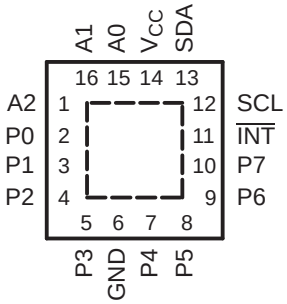

DESCRIPTION/ORDERING INFORMATION

This 8-bit I/O expander for the two-line bidirectional bus (I²C) is designed for 2.3-V to 5.5-V V_{CC} operation. It provides general-purpose remote I/O expansion for most microcontroller families via the I²C interface [serial clock (SCL), serial data (SDA)].

The PCA9554A consists of one 8-bit Configuration (input or output selection), Input, Output, and Polarity Inversion (active high or active low) registers. At power on, the I/Os are configured as inputs with a weak pullup to V_{CC}. However, the system master can enable the I/Os as either inputs or outputs by writing to the I/O configuration bits. The data for each input or output is kept in the corresponding Input or Output register. The polarity of the Input Port register can be inverted with the Polarity Inversion register. All registers can be read by the system master.

The system master can reset the PCA9554A in the event of a timeout or other improper operation by utilizing the power-on reset feature, which puts the registers in their default state and initializes the I²C/SMBus state machine.

The PCA9554A open-drain interrupt ($\overline{INT}$) output is activated when any input state differs from its corresponding Input Port register state and is used to indicate to the system master that an input state has changed.

Please be aware that an important notice concerning availability, standard warranty, and use in critical applications of Texas Instruments semiconductor products and disclaimers thereto appears at the end of this data sheet.

PRODUCTION DATA information is current as of publication date. Products conform to specifications per the terms of the Texas Instruments standard warranty. Production processing does not necessarily include testing of all parameters.

Copyright © 2006–2008, Texas Instruments Incorporated

Downloaded from DatasheetLib.com - datasheet search engine

DESCRIPTION/ORDERING INFORMATION (CONTINUED)

$\overline{INT}$ can be connected to the interrupt input of a microcontroller. By sending an interrupt signal on this line, the remote I/O can inform the microcontroller if there is incoming data on its ports without having to communicate via the I^2C bus. Thus, the PCA9554A can remain a simple slave device.

The device's outputs (latched) have high-current drive capability for directly driving LEDs and low current consumption.

Three hardware pins (A0, A1, and A2) are used to program and vary the fixed I^2C address and allow up to eight devices to share the same I^2C bus or SMBus.

The PCA9554A is pin-to-pin and I^2C address compatible with the PCF8574A. However, software changes are required, due to the enhancements in the PCA9554A over the PCF8574A.

The PCA9554A and PCA9554 are identical except for their fixed I^2C address. This allows for up to 16 of these devices (8 of each) on the same I^2C/SMBus.

ORDERING INFORMATION

T_A	PACKAGE(1)(2)		ORDERABLE PART NUMBER	TOP-SIDE MARKING
–40°C to 85°C	QFN – RGT	Reel of 3000	PCA9554ARGTR	ZVH
	QFN – RGV	Reel of 2500	PCA9554ARGVR	PD554A
	QSOP – DBQ	Tube of 75	PCA9554ADBQ	PD554A
		Reel of 2500	PCA9554ADBQR	
	SOIC – DW	Tube of 40	PCA9554ADW	PCA9554A
		Reel of 2000	PCA9554ADWR	
	SSOP – DB	Tube of 80	PCA9554ADB	PD554A
			PCA9554ADBG4	
		Reel of 2000	PCA9554ADBR	
	TSSOP – PW	Tube of 90	PCA9554APW	PD554A
		Reel of 2000	PCA9554APWR	
	TVSOP – DGV	Reel of 2000	PCA9554ADGVR	PD554A
		Reel of 125	PCA9554ADGV	

(1) Package drawings, thermal data, and symbolization are available at www.ti.com/packaging.
(2) For the most current package and ordering information, see the Package Option Addendum at the end of this document, or see the TI website at www.ti.com.

Copyright © 2006–2008, Texas Instruments Incorporated

Downloaded from DatasheetLib.com - datasheet search engine

TERMINAL FUNCTIONS

NO.		NAME	DESCRIPTION
QSOP (DBQ) SOIC (DW), SSOP (DB), TSSOP (PW), AND TVSOP (DGV)	QFN (RGT AND RGV)		
1	15	A0	Address input. Connect directly to V_{CC} or ground.
2	16	A1	Address input. Connect directly to V_{CC} or ground.
3	1	A2	Address input. Connect directly to V_{CC} or ground.
4	2	P0	P-port input/output. Push-pull design structure.
5	3	P1	P-port input/output. Push-pull design structure.
6	4	P2	P-port input/output. Push-pull design structure.
7	5	P3	P-port input/output. Push-pull design structure.
8	6	GND	Ground
9	7	P4	P-port input/output. Push-pull design structure.
10	8	P5	P-port input/output. Push-pull design structure.
11	9	P6	P-port input/output. Push-pull design structure.
12	10	P7	P-port input/output. Push-pull design structure.
13	11	$\overline{INT}$	Interrupt output. Connect to V_{CC} through a pullup resistor.
14	12	SCL	Serial clock bus. Connect to V_{CC} through a pullup resistor.
15	13	SDA	Serial data bus. Connect to V_{CC} through a pullup resistor.
16	14	V_{CC}	Supply voltage

FUNCTIONAL BLOCK DIAGRAM

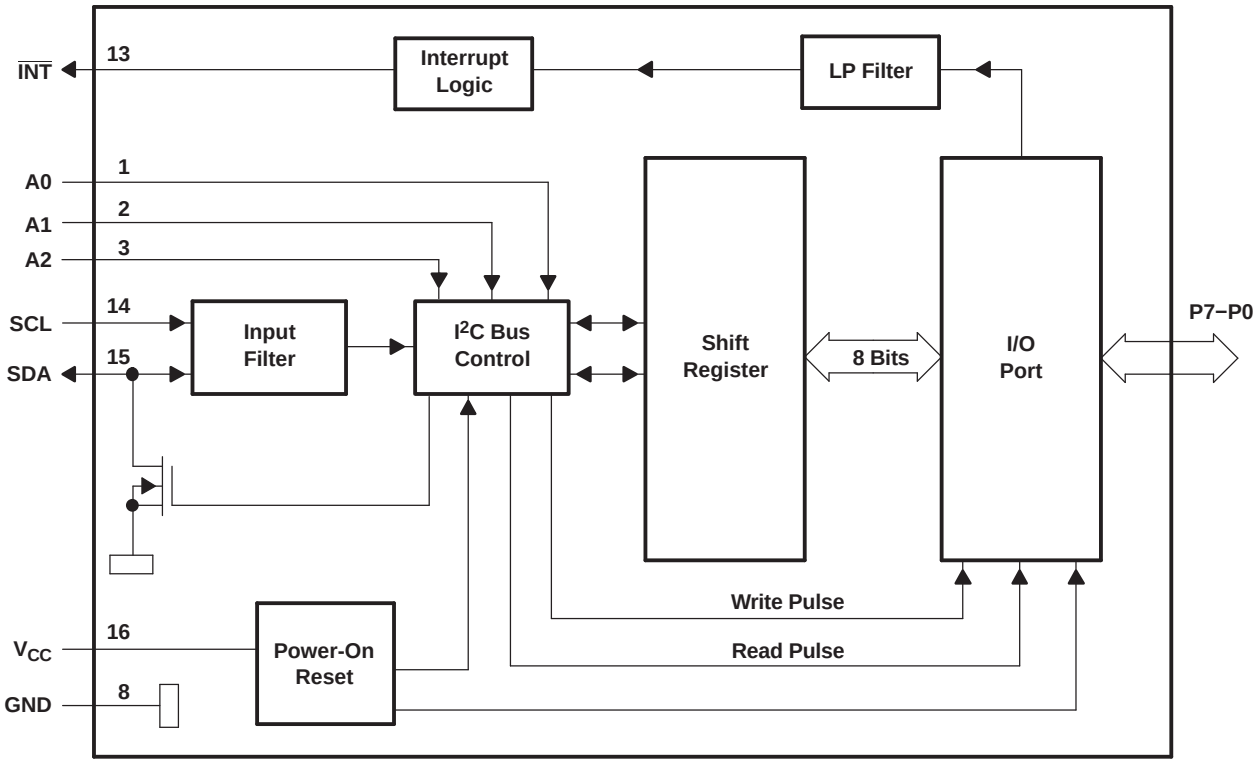

A. Pin numbers shown are for the DB, DBQ, DGV, DW, or PW package.

B. All I/Os are set to inputs at reset.

Downloaded from DatasheetLib.com - datasheet search engine

SIMPLIFIED SCHEMATIC OF P0 TO P7

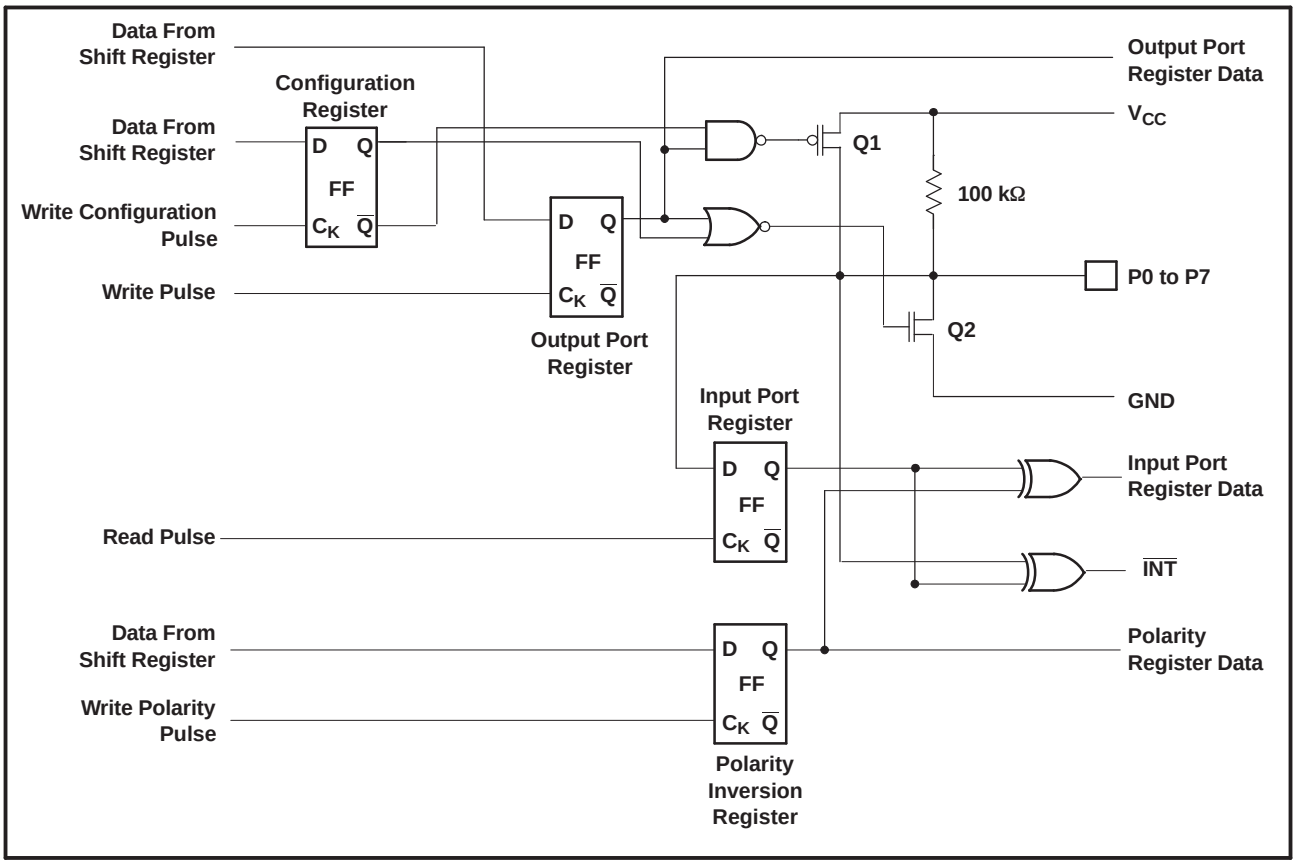

A. At power-on reset, all registers return to default values.

I/O Port

When an I/O is configured as an input, FETs Q1 and Q2 are off, which creates a high impedance input with a weak pullup (100 kΩ typ) to V_{CC}. The input voltage may be raised above V_{CC} to a maximum of 5.5 V.

If the I/O is configured as an output, Q1 or Q2 is enabled, depending on the state of the output port register. In this case, there are low impedance paths between the I/O pin and either V_{CC} or GND. The external voltage applied to this I/O pin should not exceed the recommended levels for proper operation.

I²C Interface

The bidirectional I²C bus consists of the serial clock (SCL) and serial data (SDA) lines. Both lines must be connected to a positive supply through a pullup resistor when connected to the output stages of a device. Data transfer may be initiated only when the bus is not busy.

I²C communication with this device is initiated by a master sending a Start condition, a high-to-low transition on the SDA input/output while the SCL input is high (see Figure 1). After the Start condition, the device address byte is sent, most significant bit (MSB) first, including the data direction bit (R/$\overline{W}$).

After receiving the valid address byte, this device responds with an acknowledge (ACK), a low on the SDA input/output during the high of the ACK-related clock pulse. The address inputs (A0–A2) of the slave device must not be changed between the Start and Stop conditions.

On the I²C bus, only one data bit is transferred during each clock pulse. The data on the SDA line must remain stable during the high pulse of the clock period, as changes in the data line at this time are interpreted as control commands (Start or Stop) (see Figure 2).

Copyright © 2006–2008, Texas Instruments Incorporated

Downloaded from DatasheetLib.com - datasheet search engine

A Stop condition, a low-to-high transition on the SDA input/output while the SCL input is high, is sent by the master (see Figure 1).

Any number of data bytes can be transferred from the transmitter to receiver between the Start and Stop conditions. Each byte of eight bits is followed by one ACK bit. The transmitter must release the SDA line before the receiver can send an ACK bit. The device that acknowledges must pull down the SDA line during the ACK clock pulse so that the SDA line is stable low during the high pulse of the ACK-related clock period (see Figure 3). When a slave receiver is addressed, it must generate an ACK after each byte is received. Similarly, the master must generate an ACK after each byte that it receives from the slave transmitter. Setup and hold times must be met to ensure proper operation.

A master receiver will signal an end of data to the slave transmitter by not generating an acknowledge (NACK) after the last byte has been clocked out of the slave. This is done by the master receiver by holding the SDA line high. In this event, the transmitter must release the data line to enable the master to generate a Stop condition.

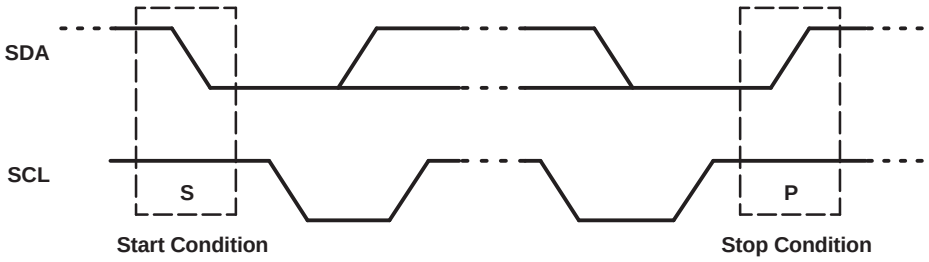

Figure 1. Definition of Start and Stop Conditions

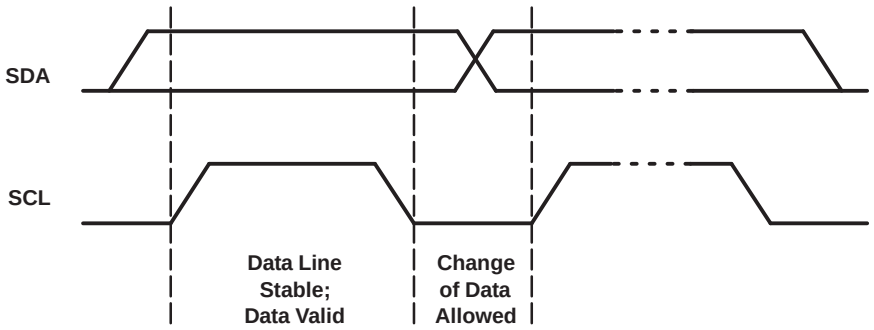

Figure 2. Bit Transfer

Downloaded from DatasheetLib.com - datasheet search engine

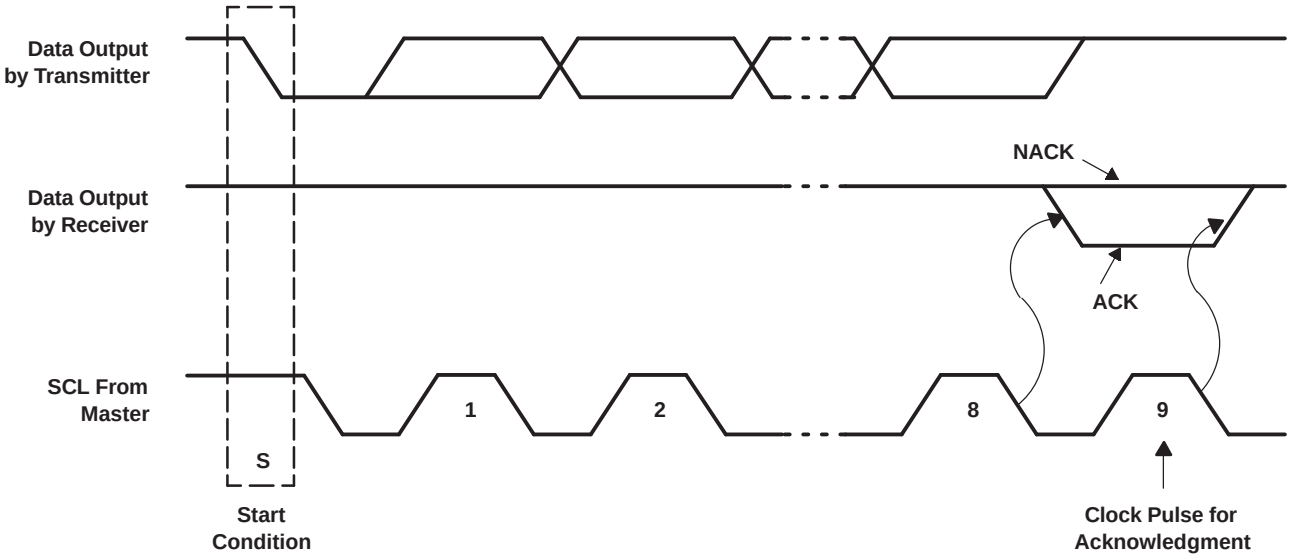

Figure 3. Acknowledgment on the I^2C Bus

Interface Definition

BYTE	BIT							
	7 (MSB)	6	5	4	3	2	1	0 (LSB)
I^2C slave address	L	H	H	H	A2	A1	A0	R/$\overline{W}$
Px I/O data bus	P7	P6	P5	P4	P3	P2	P1	P0

Copyright © 2006–2008, Texas Instruments Incorporated

Downloaded from DatasheetLib.com - datasheet search engine

Device Address

Figure 4 shows the address byte for the PCA9554A.

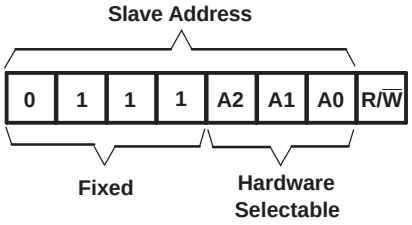

Figure 4. PCA9554A Address

Address Reference

INPUTS			I^2C BUS SLAVE ADDRESS
A2	A1	A0	
L	L	L	56 (decimal), 38 (hexadecimal)
L	L	H	57 (decimal), 39 (hexadecimal)
L	H	L	58 (decimal), 3A (hexadecimal)
L	H	H	59 (decimal), 3B (hexadecimal)
H	L	L	60 (decimal), 3C (hexadecimal)
H	L	H	61 (decimal), 3D (hexadecimal)
H	H	L	62 (decimal), 3E (hexadecimal)
H	H	H	63 (decimal), 3F (hexadecimal)

The last bit of the slave address defines the operation (read or write) to be performed. When it is high (1), a read is selected. A low (0) selects a write operation.

Control Register and Command Byte

Following the successful acknowledgment of the address byte, the bus master sends a command byte that is stored in the control register in the PCA9554A. Two bits of this command byte state the operation (read or write) and the internal register (input, output, polarity inversion or configuration) that will be affected. This register can be written or read through the I^2C bus. The command byte is sent only during a write transmission.

Once a command byte has been sent, the register that was addressed continues to be accessed by reads until a new command byte has been sent.

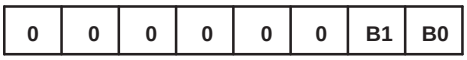

Figure 5. Control Register Bits

Command Byte

CONTROL REGISTER BITS		COMMAND BYTE (HEX)	REGISTER	PROTOCOL	POWER-UP DEFAULT
B1	B0				
0	0	0x00	Input Port	Read byte	XXXX XXXX
0	1	0x01	Output Port	Read/write byte	1111 1111
1	0	0x02	Polarity Inversion	Read/write byte	0000 0000
1	1	0x03	Configuration	Read/write byte	1111 1111

Copyright © 2006–2008, Texas Instruments Incorporated

Downloaded from DatasheetLib.com - datasheet search engine

Register Descriptions

The Input Port register (register 0) reflects the incoming logic levels of the pins, regardless of whether the pin is defined as an input or an output by the Configuration register. It only acts on read operation. Writes to these registers have no effect. The default value, X, is determined by the externally applied logic level.

Before a read operation, a write transmission is sent with the command byte to let the I^2C device know that the Input Port register will be accessed next.

Register 0 (Input Port Register)

BIT	I7	I6	I5	I4	I3	I2	I1	I0
DEFAULT	X	X	X	X	X	X	X	X

The Output Port register (register 1) shows the outgoing logic levels of the pins defined as outputs by the Configuration register. Bit values in this register have no effect on pins defined as inputs. In turn, reads from this register reflect the value that is in the flip-flop controlling the output selection, not the actual pin value.

Register 1 (Output Port Register)

BIT	O7	O6	O5	O4	O3	O2	O1	O0
DEFAULT	1	1	1	1	1	1	1	1

The Polarity Inversion register (register 2) allows polarity inversion of pins defined as inputs by the Configuration register. If a bit in this register is set (written with 1), the corresponding port pin polarity is inverted. If a bit in this register is cleared (written with a 0), the corresponding port pin original polarity is retained.

Register 2 (Polarity Inversion Register)

BIT	N7	N6	N5	N4	N3	N2	N1	N0
DEFAULT	0	0	0	0	0	0	0	0

The Configuration register (register 3) configures the directions of the I/O pins. If a bit in this register is set to 1, the corresponding port pin is enabled as an input with high impedance output driver. If a bit in this register is cleared to 0, the corresponding port pin is enabled as an output.

Register 3 (Configuration Register)

BIT	C7	C6	C5	C4	C3	C2	C1	C0
DEFAULT	1	1	1	1	1	1	1	1

Power-On Reset

When power (from 0 V) is applied to V_{CC}, an internal power-on reset holds the PCA9554A in a reset condition until V_{CC} has reached V_{POR}. At that point, the reset condition is released and the PCA9554A registers and I^2C/SMBus state machine will initialize to their default states. After that, V_{CC} must be lowered to below 0.2 V and then back up to the operating voltage for a power-reset cycle.

Copyright © 2006–2008, Texas Instruments Incorporated

Downloaded from DatasheetLib.com - datasheet search engine

Interrupt Output ($\overline{INT}$)

An interrupt is generated by any rising or falling edge of the port inputs in the input mode. After time, t_{iv}, the signal $\overline{INT}$ is valid. Resetting the interrupt circuit is achieved when data on the port is changed to the original setting; data is read from the port that generated the interrupt or in a Stop event. Resetting occurs in the read mode at the acknowledge (ACK) bit or not acknowledge (NACK) bit after the rising edge of the SCL signal. Interrupts that occur during the ACK or NACK clock pulse can be lost (or be very short) due to the resetting of the interrupt during this pulse. Each change of the I/Os after resetting is detected and is transmitted as $\overline{INT}$.

Reading from or writing to another device does not affect the interrupt circuit, and a pin configured as an output cannot cause an interrupt. Changing an I/O from an output to an input may cause a false interrupt to occur if the state of the pin does not match the contents of the Input Port register.

$\overline{INT}$ has an open-drain structure and requires a pullup resistor to V_{CC}.

Bus Transactions

Data is exchanged between the master and PCA9554A through write and read commands.

Writes

Data is transmitted to the PCA9554A by sending the device address and setting the least-significant bit to a logic 0 (see Figure 4 for device address). The command byte is sent after the address and determines which register receives the data that follows the command byte (see Figure 6 and Figure 7). There is no limitation on the number of data bytes sent in one write transmission.

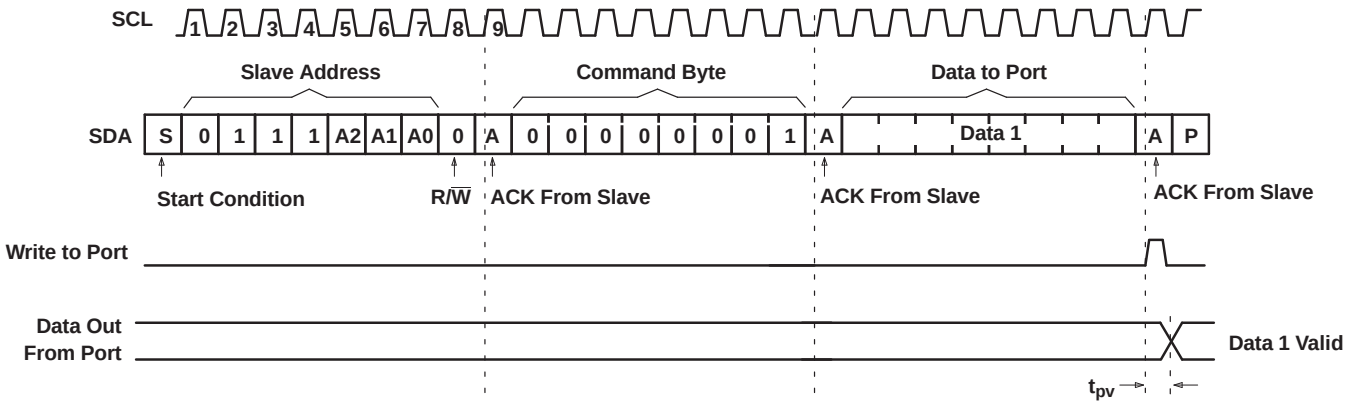

Figure 6. Write to Output Port Register

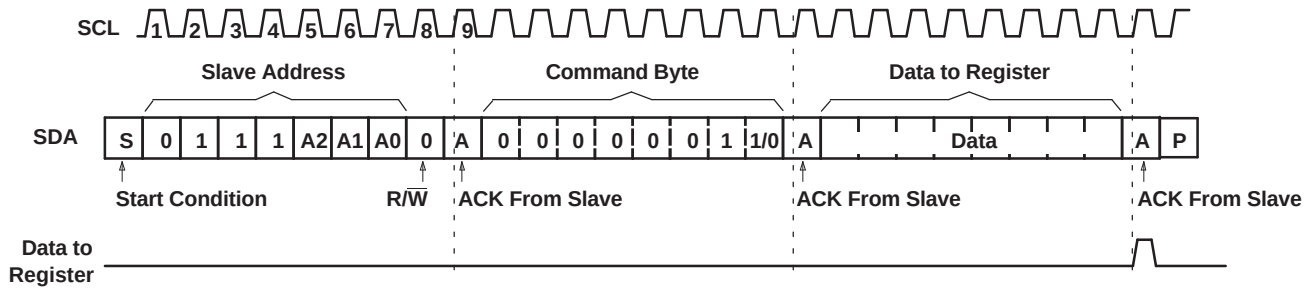

Figure 7. Write to Configuration or Polarity Inversion Registers

Downloaded from DatasheetLib.com - datasheet search engine

Reads

The bus master first must send the PCA9554A address with the least significant bit (LSB) set to a logic 0 (see Figure 4 for device address). The command byte is sent after the address and determines which register is accessed. After a restart, the device address is sent again, but this time the LSB is set to a logic 1. Data from the register defined by the command byte then is sent by the PCA9554A (see Figure 8 and Figure 9). After a restart, the value of the register defined by the command byte matches the register being accessed when the restart occurred. Data is clocked into the register on the rising edge of the ACK clock pulse. There is no limitation on the number of data bytes received in one read transmission, but when the final byte is received, the bus master must not acknowledge the data.

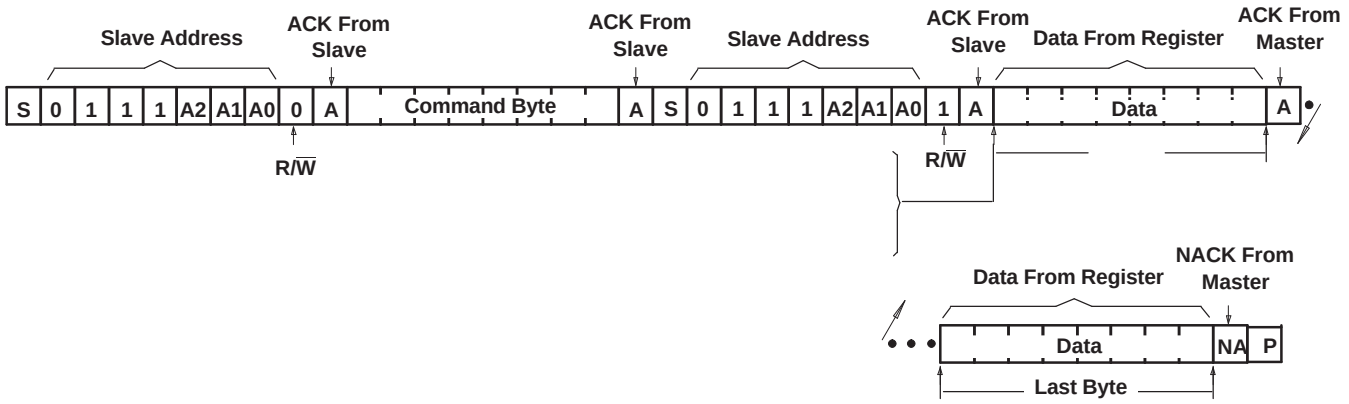

Figure 8. Read From Register

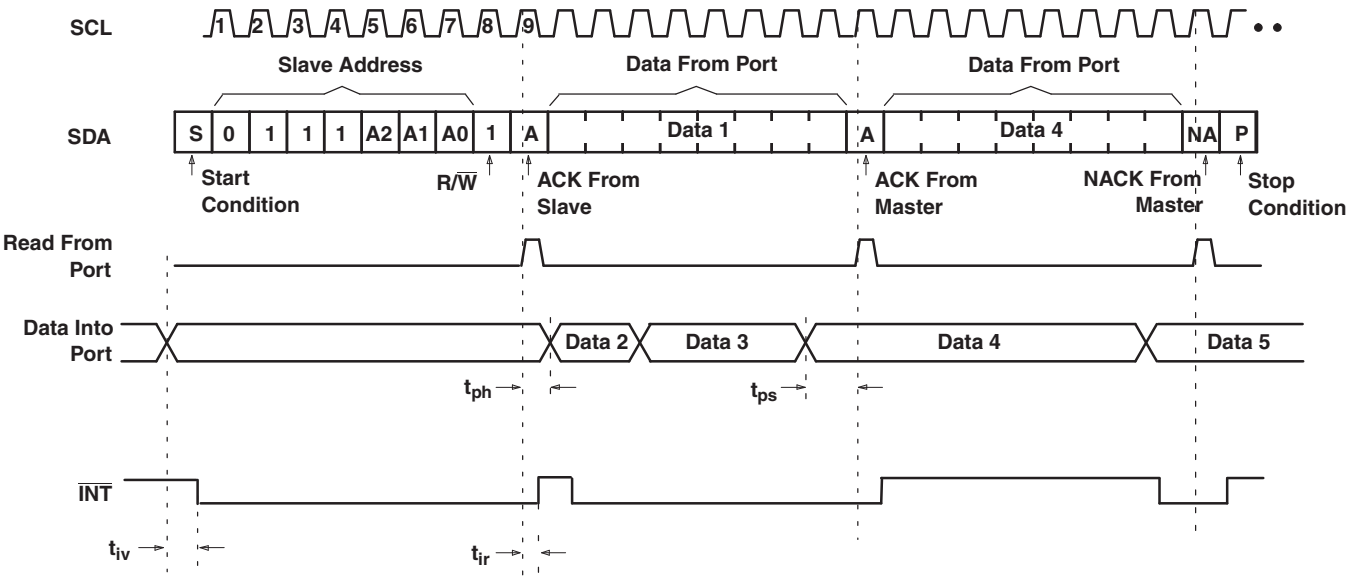

A. This figure assumes the command byte has previously been programmed with 00h.

B. Transfer of data can be stopped at any moment by a Stop condition.

C. This figure eliminates the command byte transfer, a restart, and slave address call between the initial slave address call and actual data transfer from the P port. See Figure 8 for these details.

Figure 9. Read From Input Port Register

Copyright © 2006–2008, Texas Instruments Incorporated

Downloaded from DatasheetLib.com - datasheet search engine

Absolute Maximum Ratings(1)

over operating free-air temperature range (unless otherwise noted)

			MIN	MAX	UNIT
V_{CC}	Supply voltage range		–0.5	6	V
V_I	Input voltage range(2)		–0.5	6	V
V_O	Output voltage range(2)		–0.5	6	V
I_{IK}	Input clamp current	$V_I < 0$		–20	mA
I_{OK}	Output clamp current	$V_O < 0$		–20	mA
I_{IOK}	Input/output clamp current	$V_O < 0$ or $V_O > V_{CC}$		±20	mA
I_{OL}	Continuous output low current	V_O = 0 to V_{CC}		50	mA
I_{OH}	Continuous output high current	V_O = 0 to V_{CC}		–50	mA
I_{CC}	Continuous current through GND			–250	mA
	Continuous current through V_{CC}			160	
θ_{JA}	Package thermal impedance(3)	DB package		82	°C/W
		DBQ package		90	
		DGV package		120	
		DW package		57	
		PW package		108	
		RGT package		TBD	
		RGV package		51	
T_{stg}	Storage temperature range		–65	150	°C

(1) Stresses beyond those listed under "absolute maximum ratings" may cause permanent damage to the device. These are stress ratings only, and functional operation of the device at these or any other conditions beyond those indicated under "recommended operating conditions" is not implied. Exposure to absolute-maximum-rated conditions for extended periods may affect device reliability.
(2) The input negative-voltage and output voltage ratings may be exceeded if the input and output current ratings are observed.
(3) The package thermal impedance is calculated in accordance with JESD 51-7.

Recommended Operating Conditions

			MIN	MAX	UNIT
V_{CC}	Supply voltage		2.3	5.5	V
V_{IH}	High-level input voltage	SCL, SDA	0.7 × V_{CC}	5.5	V
		A2–A0, P7–P0	2	5.5	
V_{IL}	Low-level input voltage	SCL, SDA	–0.5	0.3 × V_{CC}	V
		A2–A0, P7–P0	–0.5	0.8	
I_{OH}	High-level output current	P7–P0		–10	mA
I_{OL}	Low-level output current	P7–P0		25	mA
T_A	Operating free-air temperature		–40	85	°C

Copyright © 2006–2008, Texas Instruments Incorporated

Downloaded from DatasheetLib.com - datasheet search engine

Electrical Characteristics

over operating free-air temperature range (unless otherwise noted)

PARAMETER		TEST CONDITIONS	V_{CC}	MIN	TYP(1)	MAX	UNIT
V_{IK}	Input diode clamp voltage	I_I = –18 mA	2.3 V to 5.5 V	–1.2			V
V_{POR}	Power-on reset voltage	$V_I = V_{CC}$ or GND, I_O = 0	V_{POR}		1.5	1.65	V
V_{OH}	P-port high-level output voltage(2)	I_{OH} = –8 mA	2.3 V	1.8			V
			3 V	2.6			
			4.5 V	3.1			
			4.75 V	4.1			
		I_{OH} = –10 mA	2.3 V	1.7			
			3 V	2.5			
			4.5 V	3			
			4.75 V	4			
I_{OL}	SDA	V_{OL} = 0.4 V	2.3 V to 5.5 V	3	8		mA
	P port(3)	V_{OL} = 0.5 V	2.3 V	8	10		
			3 V	8	14		
			4.5 V	8	17		
			4.75 V	8	35		
		V_{OL} = 0.7 V	2.3 V	10	13		
			3 V	10	19		
			4.5 V	10	24		
			4.75 V	10	45		
	$\overline{INT}$	V_{OL} = 0.4 V	2.3 V to 5.5 V	3	10		
I_I	SCL, SDA	$V_I = V_{CC}$ or GND	2.3 V to 5.5 V			±1	µA
	A2–A0					±1	
I_{IH}	P port	$V_I = V_{CC}$	2.3 V to 5.5 V			1	µA
I_{IL}	P port	V_I = GND	2.3 V to 5.5 V			–100	µA
I_{CC}	Operating mode	$V_I = V_{CC}$, I_O = 0, I/O = inputs, f_{scl} = 400 kHz, No load	5.5 V		104	175	µA
			3.6 V		50	90	
			2.7 V		20	65	
		$V_I = V_{CC}$, I_O = 0, I/O = inputs, f_{scl} = 100 kHz, No load	5.5 V		60	150	
			3.6 V		15	40	
			2.7 V		8	20	
	Standby mode	V_I = GND, I_O = 0, I/O = inputs, f_{scl} = 0 kHz, No load	5.5 V		450	700	
			3.6 V		300	600	
			2.7 V		225	500	
		$V_I = V_{CC}$, I_O = 0, I/O = inputs, f_{scl} = 0 kHz, No load	5.5 V		0.25	1	
			3.6 V		0.2	0.9	
			2.7 V		0.1	0.8	
ΔI_{CC}	Additional current in standby mode	One input at V_{CC} – 0.6 V, Other inputs at V_{CC} or GND	2.3 V to 5.5 V			1.5	mA
		Every LED I/O at V_I = 4.3 V; f_{scl} = 0 kHz	5.5 V			1	
C_I	SCL	$V_I = V_{CC}$ or GND	2.3 V to 5.5 V		4	5	pF
C_{io}	SDA	$V_{IO} = V_{CC}$ or GND	2.3 V to 5.5 V		5.5	6.5	pF
	P port				8	9.5	

(1) All typical values are at nominal supply voltage (2.5-V, 3.3-V, or 5-V V_{CC}) and T_A = 25°C.
(2) The total current sourced by all I/Os must be limited to 85 mA.
(3) Each I/O must be externally limited to a maximum of 25 mA, and the P port (P0 to P7) must be limited to a maximum current of 200 mA.

Copyright © 2006–2008, Texas Instruments Incorporated

Downloaded from DatasheetLib.com - datasheet search engine

I²C Interface Timing Requirements

over operating free-air temperature range (unless otherwise noted) (see Figure 10)

			STANDARD MODE I²C BUS		FAST MODE I²C BUS		UNIT
			MIN	MAX	MIN	MAX	
f_{scl}	I²C clock frequency		0	100	0	400	kHz
t_{sch}	I²C clock high time		4		0.6		µs
t_{scl}	I²C clock low time		4.7		1.3		µs
t_{sp}	I²C spike time			50		50	ns
t_{sds}	I²C serial-data setup time		250		100		ns
t_{sdh}	I²C serial-data hold time		0		0		ns
t_{icr}	I²C input rise time			1000	$20 + 0.1C_b$ (1)	300	ns
t_{icf}	I²C input fall time			300	$20 + 0.1C_b$ (1)	300	ns
t_{ocf}	I²C output fall time	10-pF to 400-pF bus		300	$20 + 0.1C_b$ (1)	300	ns
t_{buf}	I²C bus free time between Stop and Start		4.7		1.3		µs
t_{sts}	I²C Start or repeated Start condition setup		4.7		0.6		µs
t_{sth}	I²C Start or repeated Start condition hold		4		0.6		µs
t_{sps}	I²C Stop condition setup		4		0.6		µs
$t_{vd(data)}$	Valid data time	SCL low to SDA output valid	300		50		ns
$t_{vd(ack)}$	Valid data time of ACK condition	ACK signal from SCL low to SDA (out) low	0.3	3.45	0.1	0.9	µs
C_b	I²C bus capacitive load			400		400	ns

(1) C_b = Total capacitive load of one bus in pF

Switching Characteristics

over operating free-air temperature range (unless otherwise noted) (see Figure 11 and Figure 12)

PARAMETER		FROM (INPUT)	TO (OUTPUT)	STANDARD MODE I²C BUS		FAST MODE I²C BUS		UNIT
				MIN	MAX	MIN	MAX	
t_{iv}	Interrupt valid time	P port	$\overline{INT}$		4		4	µs
t_{ir}	Interrupt reset delay time	SCL	$\overline{INT}$		4		4	µs
t_{pv}	Output data valid	SCL	P7–P0		200		200	ns
t_{ps}	Input data setup time	P port	SCL	100		100		ns
t_{ph}	Input data hold time	P port	SCL	1		1		µs

Copyright © 2006–2008, Texas Instruments Incorporated

Downloaded from DatasheetLib.com - datasheet search engine

TYPICAL CHARACTERISTICS

SUPPLY CURRENT vs TEMPERATURE

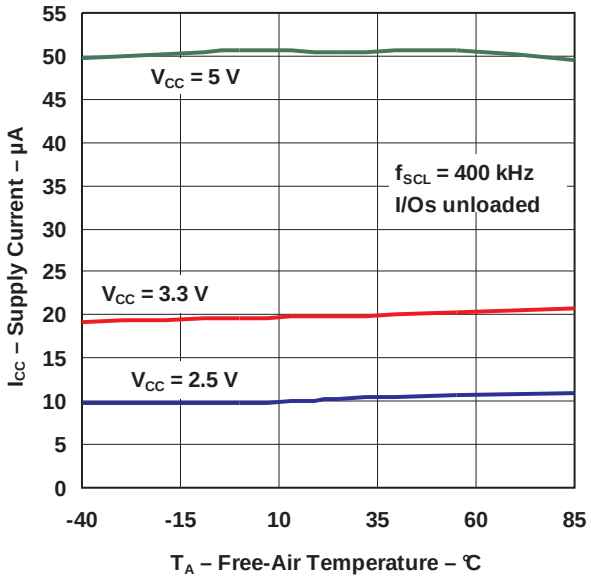

QUIESCENT SUPPLY CURRENT vs TEMPERATURE

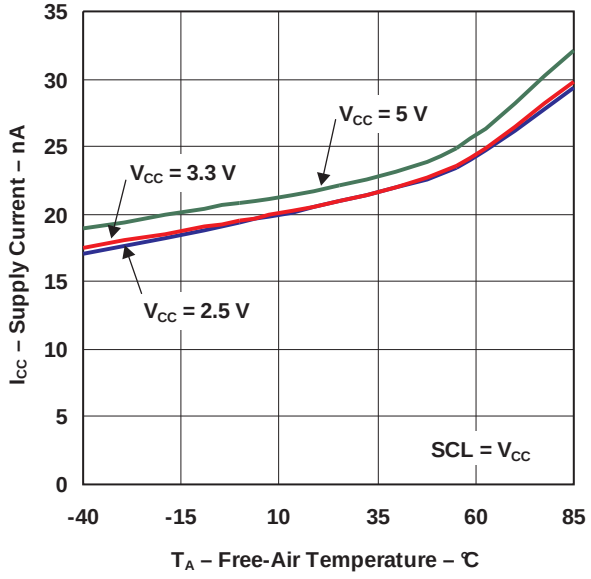

SUPPLY CURRENT vs SUPPLY VOLTAGE

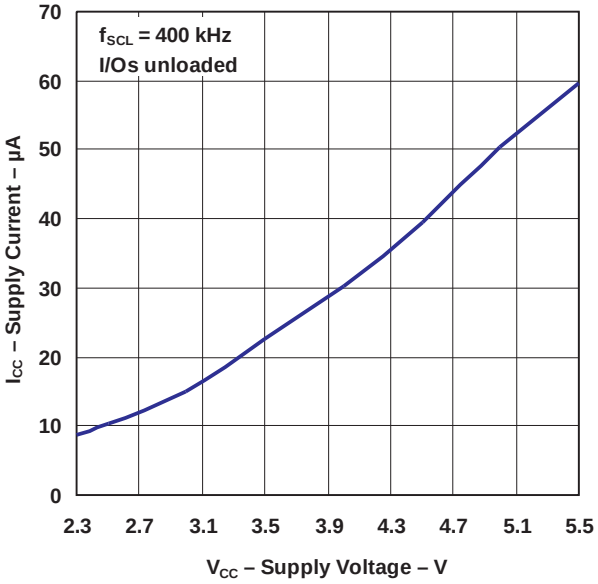

SUPPLY CURRENT vs NUMBER OF I/Os HELD LOW

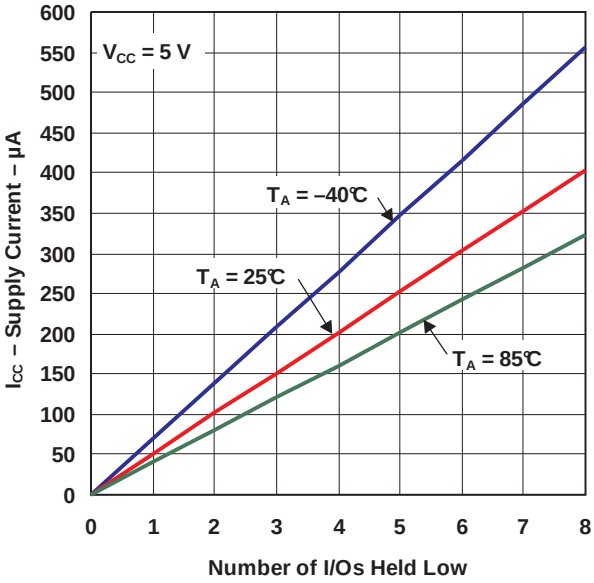

Copyright © 2006–2008, Texas Instruments Incorporated

Downloaded from DatasheetLib.com - datasheet search engine

TYPICAL CHARACTERISTICS (continued)

I/O OUTPUT LOW VOLTAGE vs TEMPERATURE

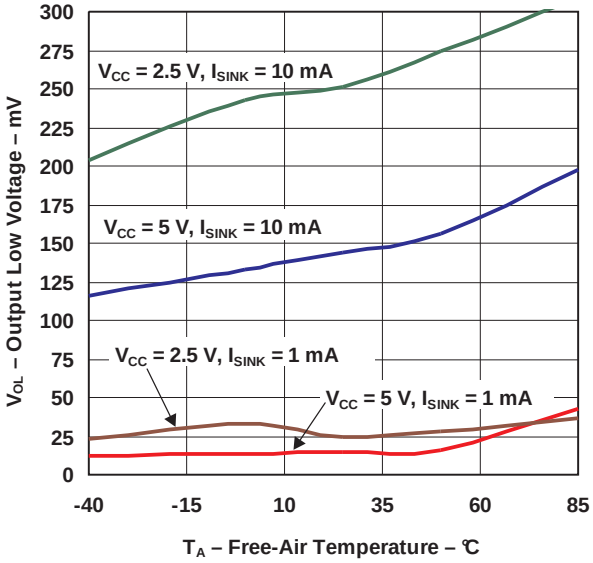

I/O SINK CURRENT vs OUTPUT LOW VOLTAGE

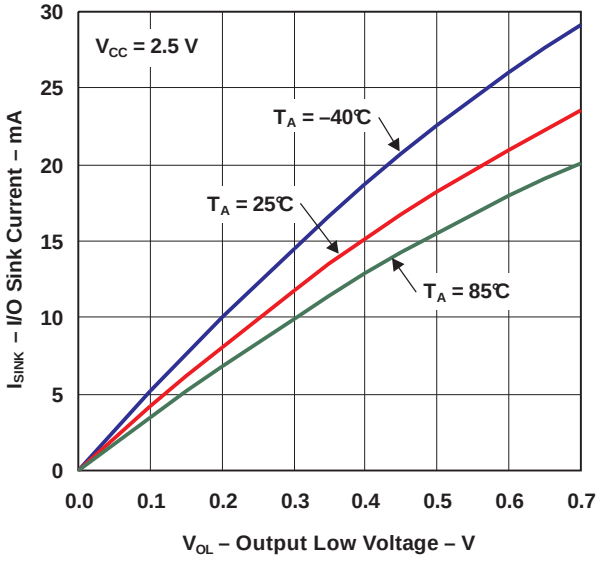

I/O SINK CURRENT vs OUTPUT LOW VOLTAGE

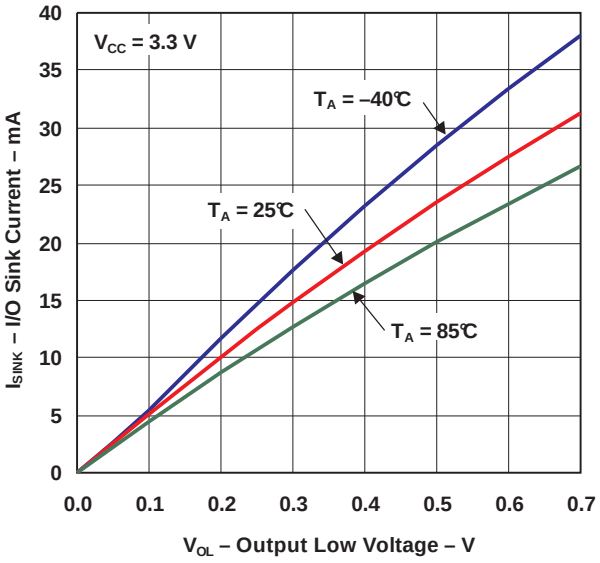

I/O SINK CURRENT vs OUTPUT LOW VOLTAGE

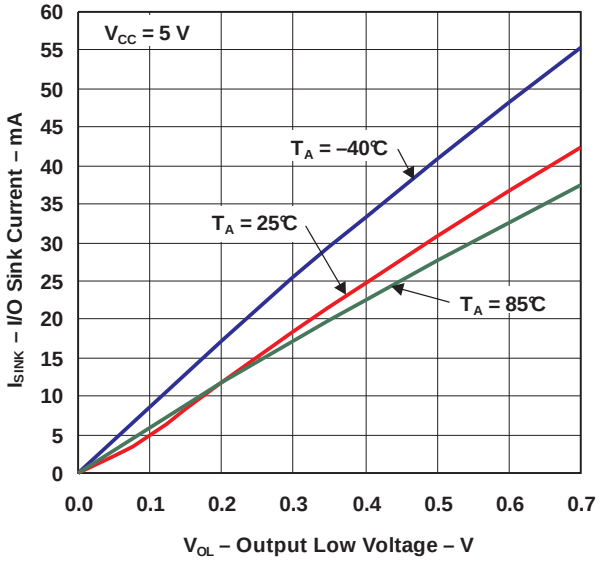

Copyright © 2006–2008, Texas Instruments Incorporated

Downloaded from DatasheetLib.com - datasheet search engine

TYPICAL CHARACTERISTICS (continued)

I/O OUTPUT HIGH VOLTAGE vs TEMPERATURE

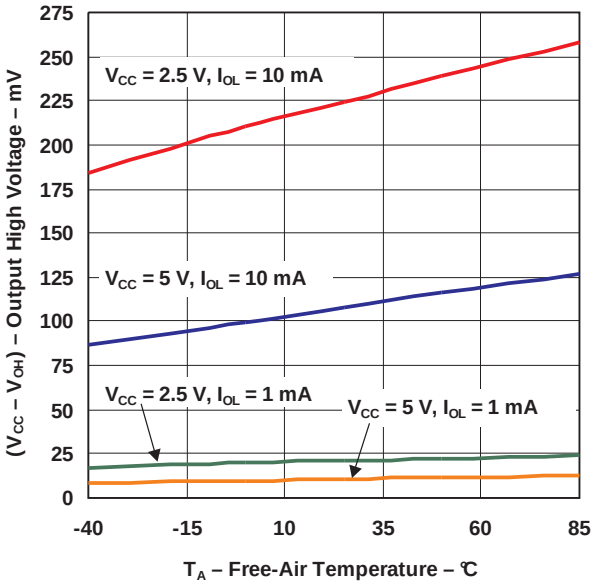

I/O SOURCE CURRENT vs OUTPUT HIGH VOLTAGE

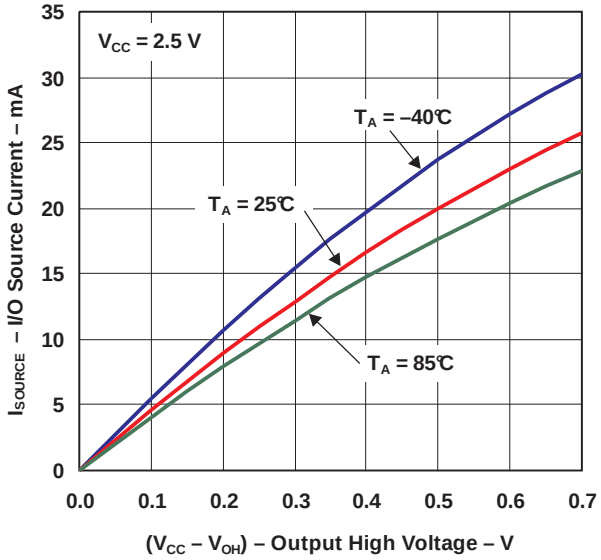

I/O SOURCE CURRENT vs OUTPUT HIGH VOLTAGE

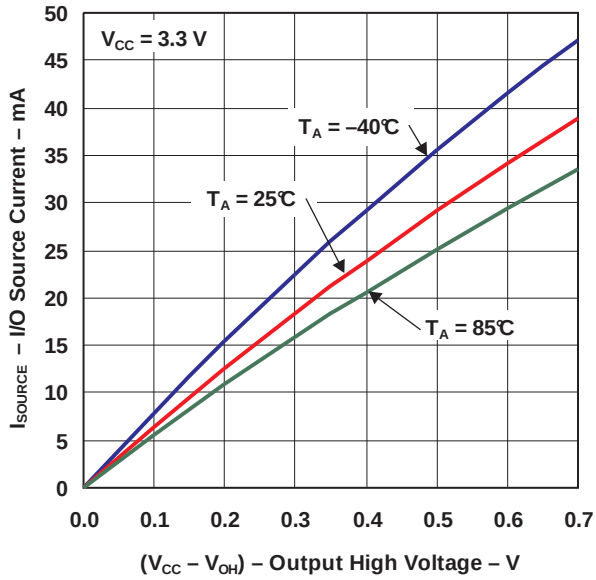

I/O SOURCE CURRENT vs OUTPUT HIGH VOLTAGE

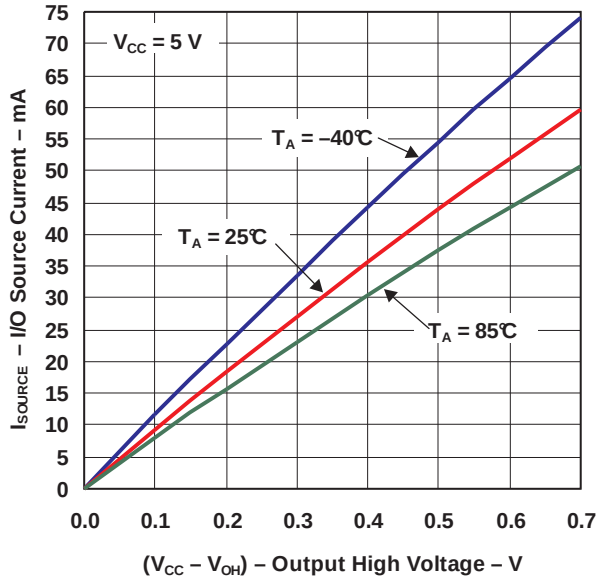

Copyright © 2006–2008, Texas Instruments Incorporated

Downloaded from DatasheetLib.com - datasheet search engine

TYPICAL CHARACTERISTICS (continued)

OUTPUT HIGH VOLTAGE vs SUPPLY VOLTAGE

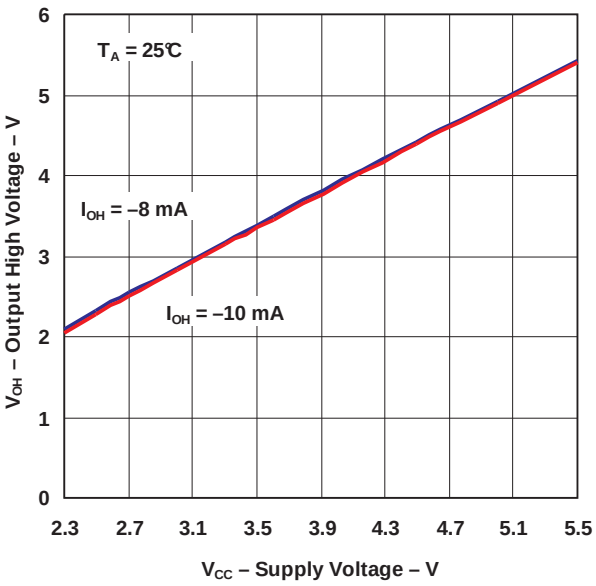

Downloaded from DatasheetLib.com - datasheet search engine

PARAMETER MEASUREMENT INFORMATION

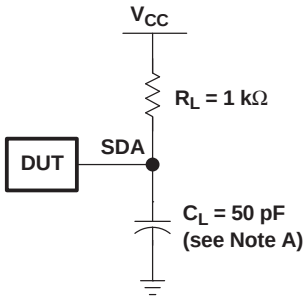

SDA LOAD CONFIGURATION

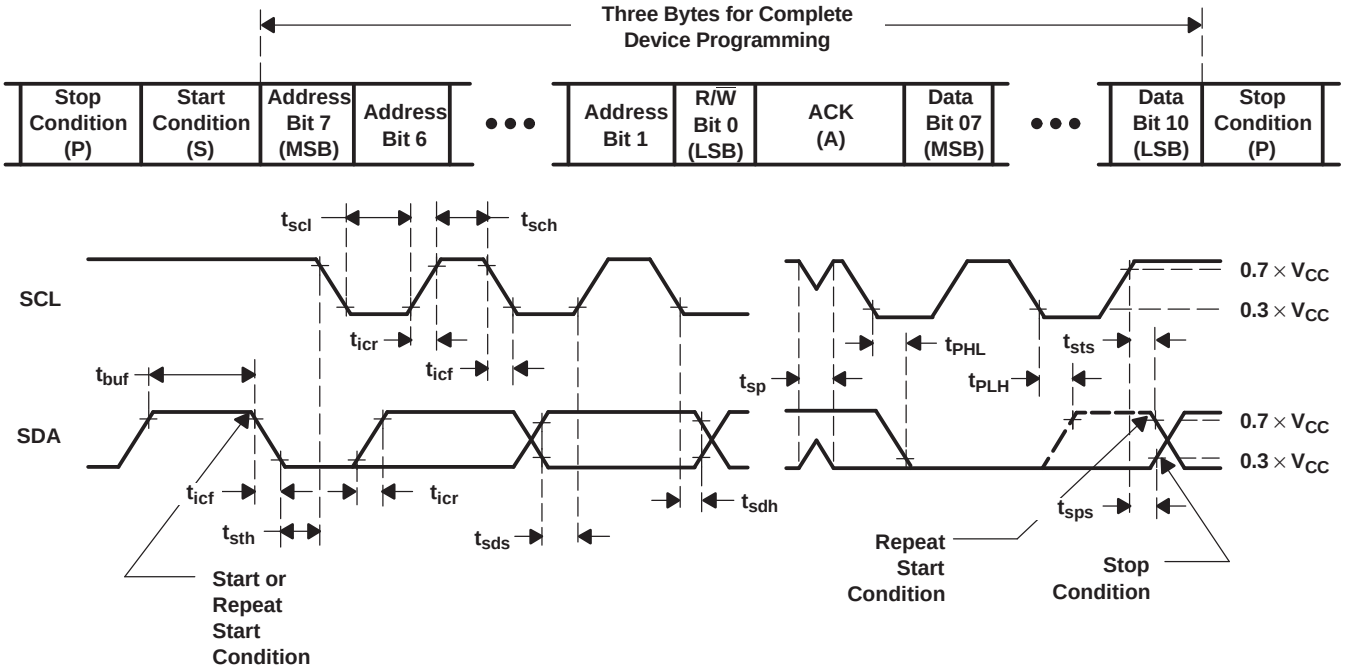

VOLTAGE WAVEFORMS

BYTE	DESCRIPTION
1	I^2C address
2, 3	P-port data

A. C_L includes probe and jig capacitance.

B. All inputs are supplied by generators having the following characteristics: PRR ≤ 10 MHz, Z_O = 50 Ω, t_r/t_f ≤ 30 ns.

C. All parameters and waveforms are not applicable to all devices.

Figure 10. I^2C Interface Load Circuit and Voltage Waveforms

Copyright © 2006–2008, Texas Instruments Incorporated

Downloaded from DatasheetLib.com - datasheet search engine

PARAMETER MEASUREMENT INFORMATION (continued)

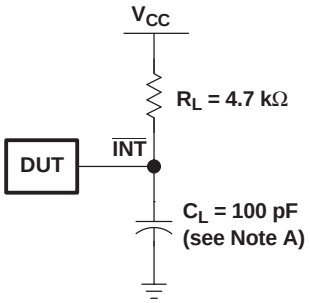

INTERRUPT LOAD CONFIGURATION

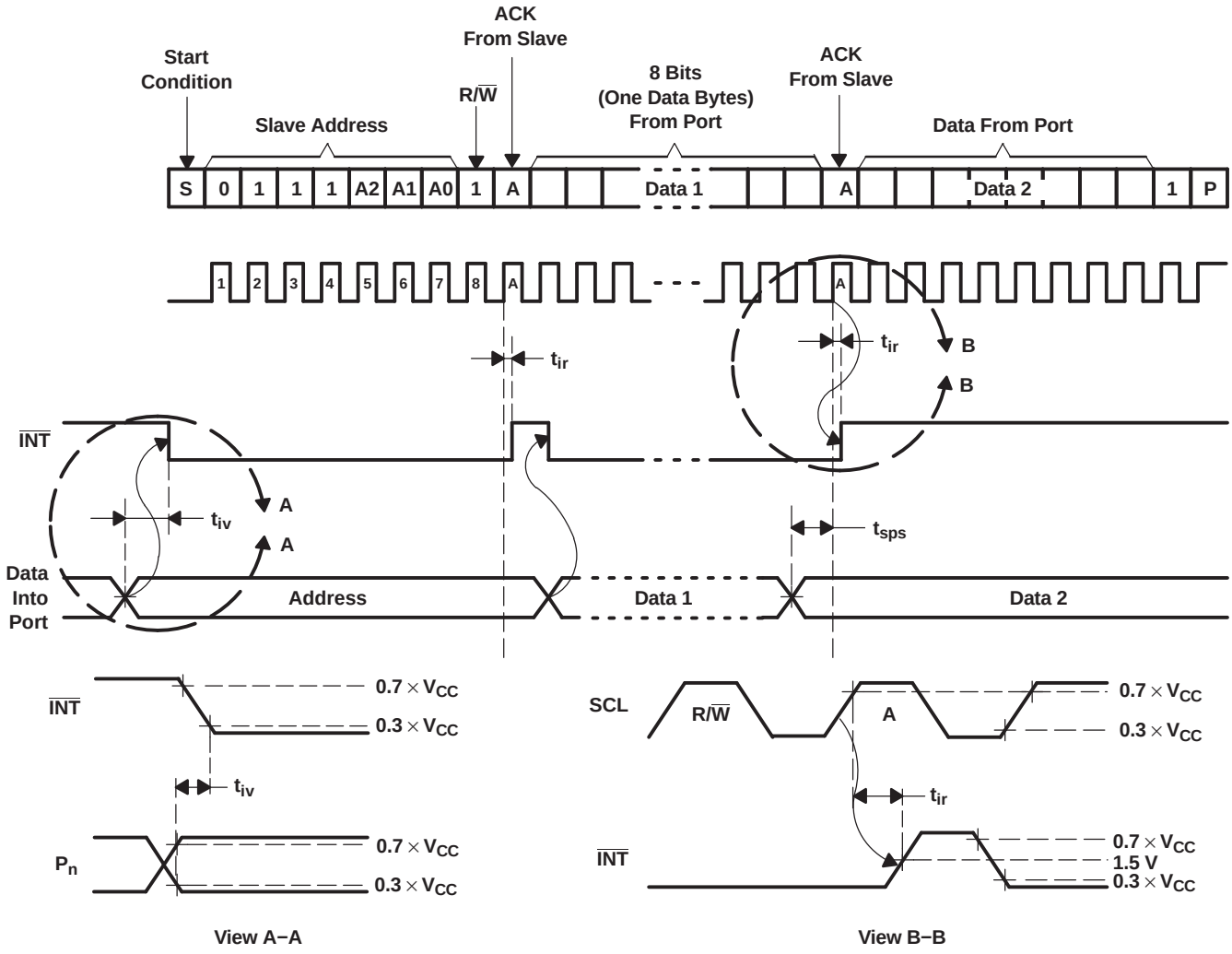

View A–A View B–B

A. C_L includes probe and jig capacitance.

B. All inputs are supplied by generators having the following characteristics: PRR ≤ 10 MHz, Z_O = 50 Ω, t_r/t_f ≤ 30 ns.

C. All parameters and waveforms are not applicable to all devices.

Figure 11. Interrupt Load Circuit and Voltage Waveforms

Downloaded from DatasheetLib.com - datasheet search engine

PARAMETER MEASUREMENT INFORMATION (continued)

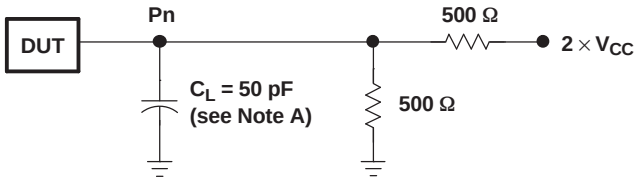

P-PORT LOAD CONFIGURATION

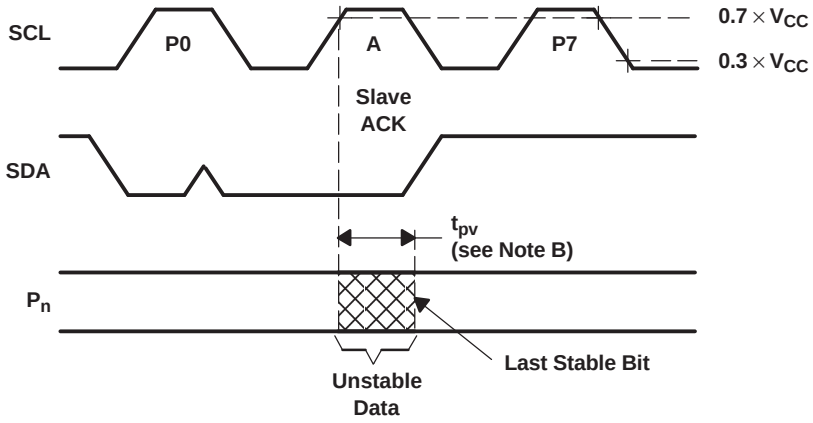

WRITE MODE (R/$\overline{W}$ = 0)

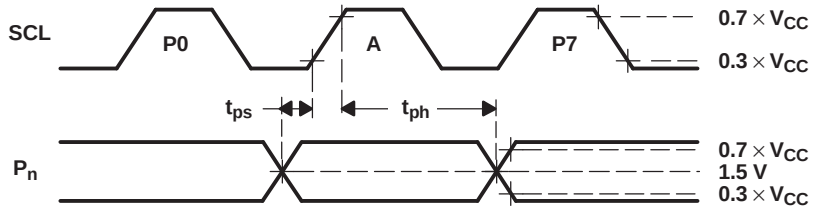

READ MODE (R/$\overline{W}$ = 1)

A. C_L includes probe and jig capacitance.

B. t_{pv} is measured from 0.7 × V_{CC} on SCL to 50% I/O pin output.

C. All inputs are supplied by generators having the following characteristics: PRR ≤ 10 MHz, Z_O = 50 Ω, t_r/t_f ≤ 30 ns.

D. The outputs are measured one at a time, with one transition per measurement.

E. All parameters and waveforms are not applicable to all devices.

Figure 12. P-Port Load Circuit and Voltage Waveforms

Copyright © 2006–2008, Texas Instruments Incorporated

Downloaded from DatasheetLib.com - datasheet search engine

PARAMETER MEASUREMENT INFORMATION (continued)

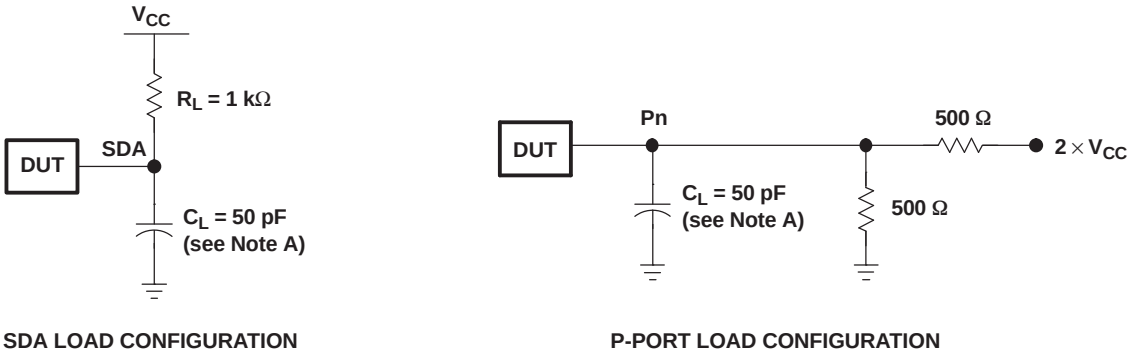

SDA LOAD CONFIGURATION

P-PORT LOAD CONFIGURATION

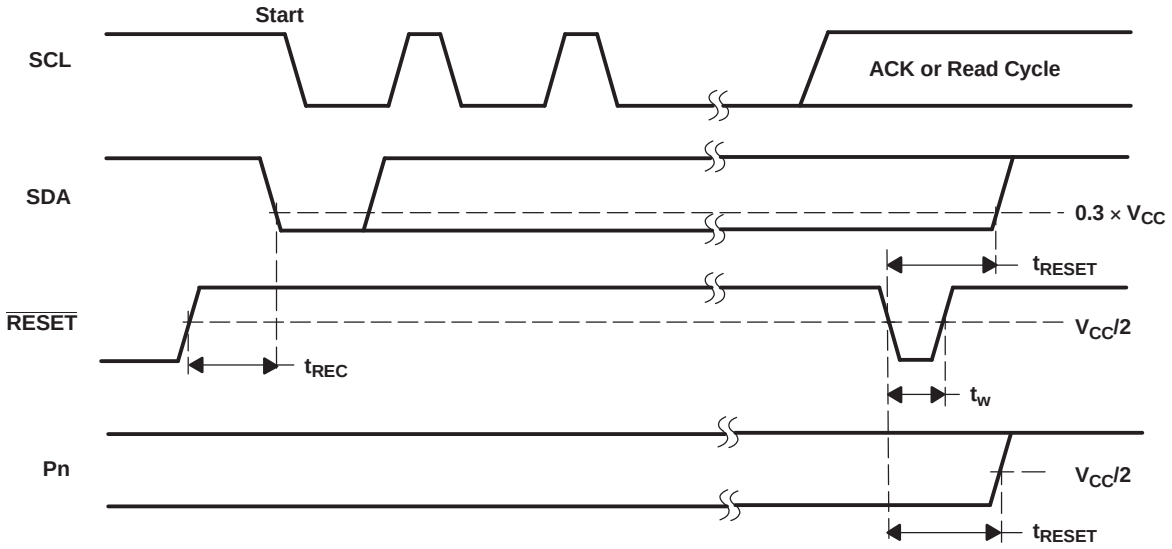

A. C_L includes probe and jig capacitance.

B. All inputs are supplied by generators having the following characteristics: PRR ≤ 10 MHz, Z_O = 50 Ω, t_r/t_f ≤ 30 ns.

C. All parameters and waveforms are not applicable to all devices.

Figure 13. Reset Load Circuits and Voltage Waveforms

Downloaded from DatasheetLib.com - datasheet search engine

APPLICATION INFORMATION

Figure 14 shows an application in which the PCA9554A can be used.

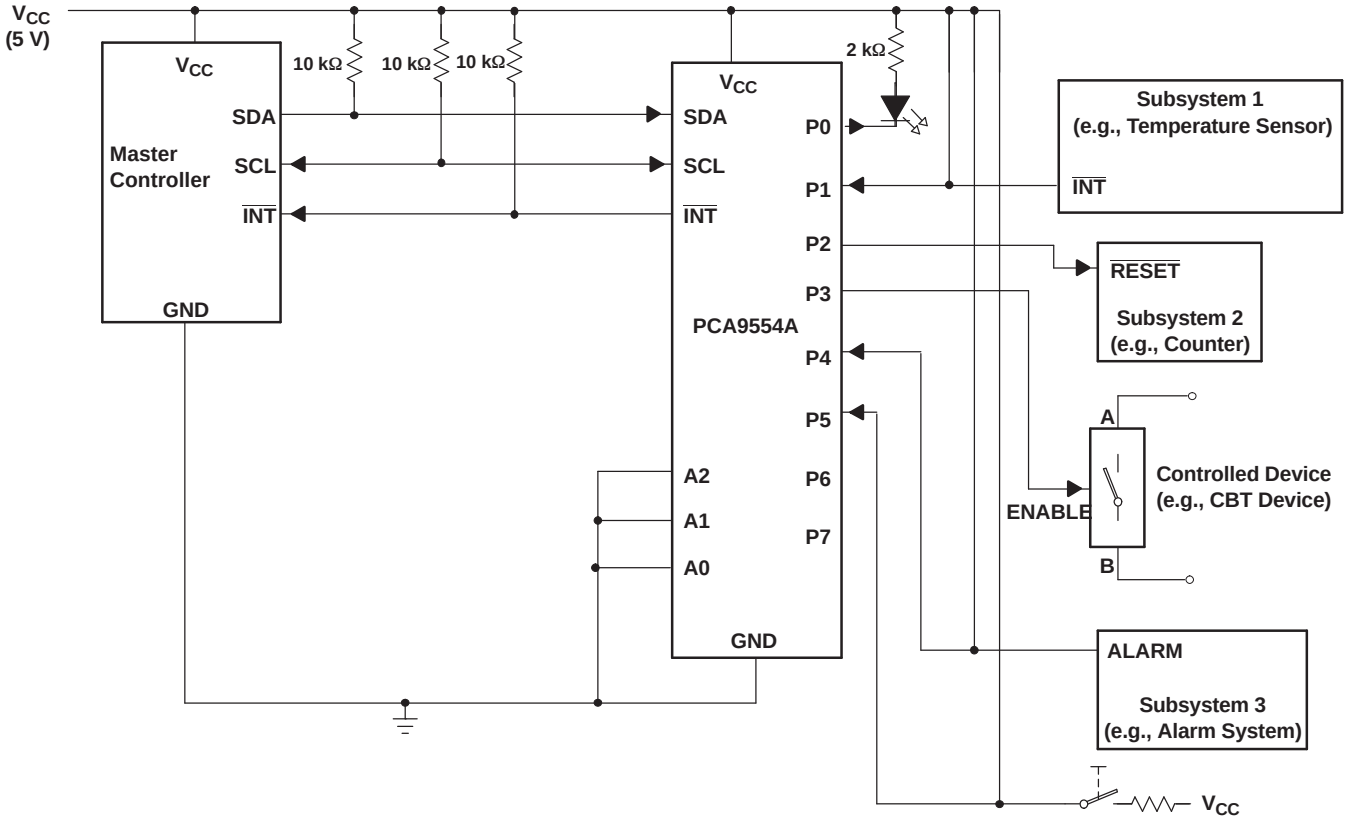

A. Device address is configured as 0111000 for this example.

B. P0, P2, and P3 are configured as outputs.

C. P1, P4, and P5 are configured as inputs.

D. P6 and P7 are not used and have internal 100-kΩ pullup resistors to protect them from floating.

Figure 14. Typical Application

Copyright © 2006–2008, Texas Instruments Incorporated

Downloaded from DatasheetLib.com - datasheet search engine

Minimizing I_{CC} When I/Os Control LEDs

When the I/Os are used to control LEDs, they are normally connected to V_{CC} through a resistor as shown in Figure 14. Because the LED acts as a diode, when the LED is off, the I/O V_{IN} is about 1.2 V less than V_{CC}. The supply current, I_{CC}, increases as V_{IN} becomes lower than V_{CC} and is specified as ΔI_{CC} in *Electrical Characteristics*.

For battery-powered applications, it is essential that the voltage of I/O pins is greater than or equal to V_{CC} when the LED is off to minimize current consumption. Figure 15 shows a high-value resistor in parallel with the LED. Figure 16 shows V_{CC} less than the LED supply voltage by at least 1.2 V. Both of these methods maintain the I/O V_{IN} at or above V_{CC} and prevents additional supply-current consumption when the LED is off.

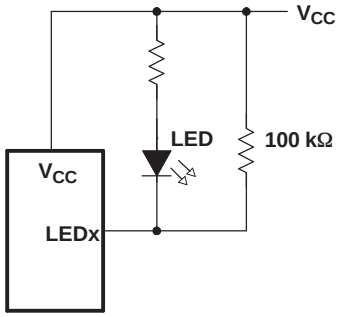

Figure 15. High-Value Resistor in Parallel With the LED

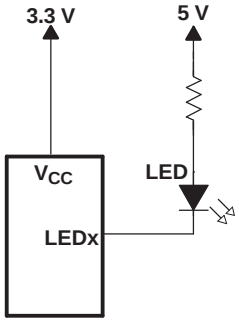

Figure 16. Device Supplied by a Lower Voltage

Downloaded from DatasheetLib.com - datasheet search engine

PACKAGING INFORMATION

Orderable Device	Status (1)	Package Type	Package Drawing	Pins	Package Qty	Eco Plan (2)	Lead/Ball Finish	MSL Peak Temp (3)
PCA9554ADB	ACTIVE	SSOP	DB	16	80	Green (RoHS & no Sb/Br)	CU NIPDAU	Level-1-260C-UNLIM
PCA9554ADBG4	ACTIVE	SSOP	DB	16	80	Green (RoHS & no Sb/Br)	CU NIPDAU	Level-1-260C-UNLIM
PCA9554ADBR	ACTIVE	SSOP	DB	16	2000	Green (RoHS & no Sb/Br)	CU NIPDAU	Level-1-260C-UNLIM
PCA9554ADBRG4	ACTIVE	SSOP	DB	16	2000	Green (RoHS & no Sb/Br)	CU NIPDAU	Level-1-260C-UNLIM
PCA9554ADGVR	ACTIVE	TVSOP	DGV	16	2000	Green (RoHS & no Sb/Br)	CU NIPDAU	Level-1-260C-UNLIM
PCA9554ADGVRG4	ACTIVE	TVSOP	DGV	16	2000	Green (RoHS & no Sb/Br)	CU NIPDAU	Level-1-260C-UNLIM
PCA9554ADW	ACTIVE	SOIC	DW	16	40	Green (RoHS & no Sb/Br)	CU NIPDAU	Level-1-260C-UNLIM
PCA9554ADWG4	ACTIVE	SOIC	DW	16	40	Green (RoHS & no Sb/Br)	CU NIPDAU	Level-1-260C-UNLIM
PCA9554ADWR	ACTIVE	SOIC	DW	16	2000	Green (RoHS & no Sb/Br)	CU NIPDAU	Level-1-260C-UNLIM
PCA9554ADWRG4	ACTIVE	SOIC	DW	16	2000	Green (RoHS & no Sb/Br)	CU NIPDAU	Level-1-260C-UNLIM
PCA9554APW	ACTIVE	TSSOP	PW	16	90	Green (RoHS & no Sb/Br)	CU NIPDAU	Level-1-260C-UNLIM
PCA9554APWG4	ACTIVE	TSSOP	PW	16	90	Green (RoHS & no Sb/Br)	CU NIPDAU	Level-1-260C-UNLIM
PCA9554APWR	ACTIVE	TSSOP	PW	16	2000	Green (RoHS & no Sb/Br)	CU NIPDAU	Level-1-260C-UNLIM
PCA9554APWRG4	ACTIVE	TSSOP	PW	16	2000	Green (RoHS & no Sb/Br)	CU NIPDAU	Level-1-260C-UNLIM
PCA9554ARGTR	ACTIVE	QFN	RGT	16	3000	Green (RoHS & no Sb/Br)	CU NIPDAU	Level-2-260C-1 YEAR
PCA9554ARGTRG4	ACTIVE	QFN	RGT	16	3000	Green (RoHS & no Sb/Br)	CU NIPDAU	Level-2-260C-1 YEAR
PCA9554ARGVR	ACTIVE	VQFN	RGV	16	2500	Green (RoHS & no Sb/Br)	CU NIPDAU	Level-2-260C-1 YEAR
PCA9554ARGVRG4	ACTIVE	VQFN	RGV	16	2500	Green (RoHS & no Sb/Br)	CU NIPDAU	Level-2-260C-1 YEAR

(1) The marketing status values are defined as follows:
ACTIVE: Product device recommended for new designs.
LIFEBUY: TI has announced that the device will be discontinued, and a lifetime-buy period is in effect.
NRND: Not recommended for new designs. Device is in production to support existing customers, but TI does not recommend using this part in a new design.
PREVIEW: Device has been announced but is not in production. Samples may or may not be available.
OBSOLETE: TI has discontinued the production of the device.

(2) Eco Plan - The planned eco-friendly classification: Pb-Free (RoHS), Pb-Free (RoHS Exempt), or Green (RoHS & no Sb/Br) - please check http://www.ti.com/productcontent for the latest availability information and additional product content details.
TBD: The Pb-Free/Green conversion plan has not been defined.
Pb-Free (RoHS): TI's terms "Lead-Free" or "Pb-Free" mean semiconductor products that are compatible with the current RoHS requirements for all 6 substances, including the requirement that lead not exceed 0.1% by weight in homogeneous materials. Where designed to be soldered at high temperatures, TI Pb-Free products are suitable for use in specified lead-free processes.
Pb-Free (RoHS Exempt): This component has a RoHS exemption for either 1) lead-based flip-chip solder bumps used between the die and

Downloaded from DatasheetLib.com - datasheet search engine

package, or 2) lead-based die adhesive used between the die and leadframe. The component is otherwise considered Pb-Free (RoHS compatible) as defined above.
Green (RoHS & no Sb/Br): TI defines "Green" to mean Pb-Free (RoHS compatible), and free of Bromine (Br) and Antimony (Sb) based flame retardants (Br or Sb do not exceed 0.1% by weight in homogeneous material)

(3) MSL, Peak Temp. -- The Moisture Sensitivity Level rating according to the JEDEC industry standard classifications, and peak solder temperature.

Important Information and Disclaimer: The information provided on this page represents TI's knowledge and belief as of the date that it is provided. TI bases its knowledge and belief on information provided by third parties, and makes no representation or warranty as to the accuracy of such information. Efforts are underway to better integrate information from third parties. TI has taken and continues to take reasonable steps to provide representative and accurate information but may not have conducted destructive testing or chemical analysis on incoming materials and chemicals. TI and TI suppliers consider certain information to be proprietary, and thus CAS numbers and other limited information may not be available for release.

In no event shall TI's liability arising out of such information exceed the total purchase price of the TI part(s) at issue in this document sold by TI to Customer on an annual basis.

Downloaded from DatasheetLib.com - datasheet search engine

TAPE AND REEL INFORMATION

REEL DIMENSIONS

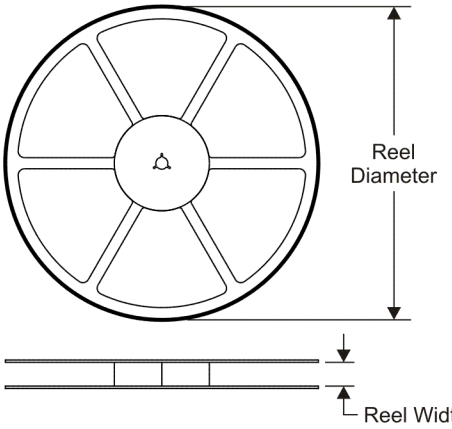

TAPE DIMENSIONS

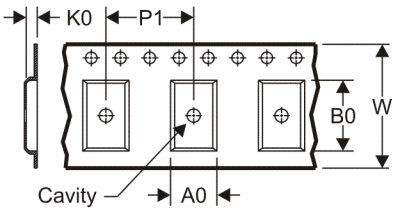

A0	Dimension designed to accommodate the component width
B0	Dimension designed to accommodate the component length
K0	Dimension designed to accommodate the component thickness
W	Overall width of the carrier tape
P1	Pitch between successive cavity centers

QUADRANT ASSIGNMENTS FOR PIN 1 ORIENTATION IN TAPE

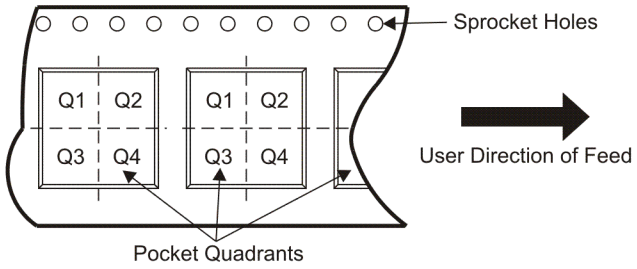

*All dimensions are nominal

Device	Package Type	Package Drawing	Pins	SPQ	Reel Diameter (mm)	Reel Width W1 (mm)	A0 (mm)	B0 (mm)	K0 (mm)	P1 (mm)	W (mm)	Pin1 Quadrant
PCA9554ADBR	SSOP	DB	16	2000	330.0	16.4	8.2	6.6	2.5	12.0	16.0	Q1
PCA9554ADGVR	TVSOP	DGV	16	2000	330.0	12.4	6.8	4.0	1.6	8.0	12.0	Q1
PCA9554ADWR	SOIC	DW	16	2000	330.0	16.4	10.75	10.7	2.7	12.0	16.0	Q1
PCA9554APWR	TSSOP	PW	16	2000	330.0	12.4	7.0	5.6	1.6	8.0	12.0	Q1
PCA9554ARGTR	QFN	RGT	16	3000	330.0	12.4	3.3	3.3	1.1	8.0	12.0	Q2
PCA9554ARGVR	VQFN	RGV	16	2500	330.0	12.4	4.25	4.25	1.15	8.0	12.0	Q2

Downloaded from DatasheetLib.com - datasheet search engine

TAPE AND REEL BOX DIMENSIONS

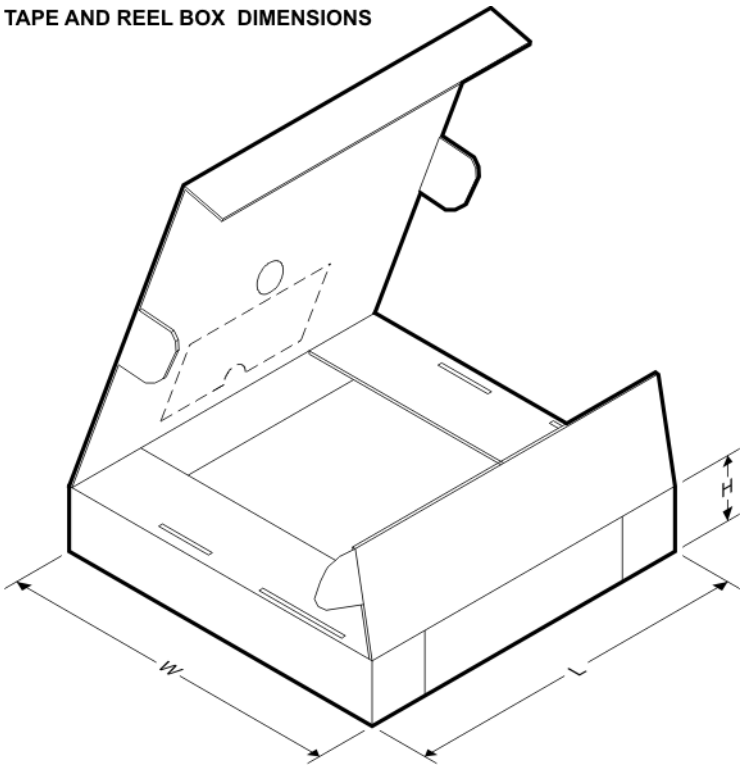

*All dimensions are nominal

Device	Package Type	Package Drawing	Pins	SPQ	Length (mm)	Width (mm)	Height (mm)
PCA9554ADBR	SSOP	DB	16	2000	346.0	346.0	33.0
PCA9554ADGVR	TVSOP	DGV	16	2000	346.0	346.0	29.0
PCA9554ADWR	SOIC	DW	16	2000	346.0	346.0	33.0
PCA9554APWR	TSSOP	PW	16	2000	346.0	346.0	29.0
PCA9554ARGTR	QFN	RGT	16	3000	346.0	346.0	29.0
PCA9554ARGVR	VQFN	RGV	16	2500	346.0	346.0	29.0

Downloaded from DatasheetLib.com - datasheet search engine

MSSO002E – JANUARY 1995 – REVISED DECEMBER 2001

DB (R-PDSO-G)** **PLASTIC SMALL-OUTLINE**

28 PINS SHOWN

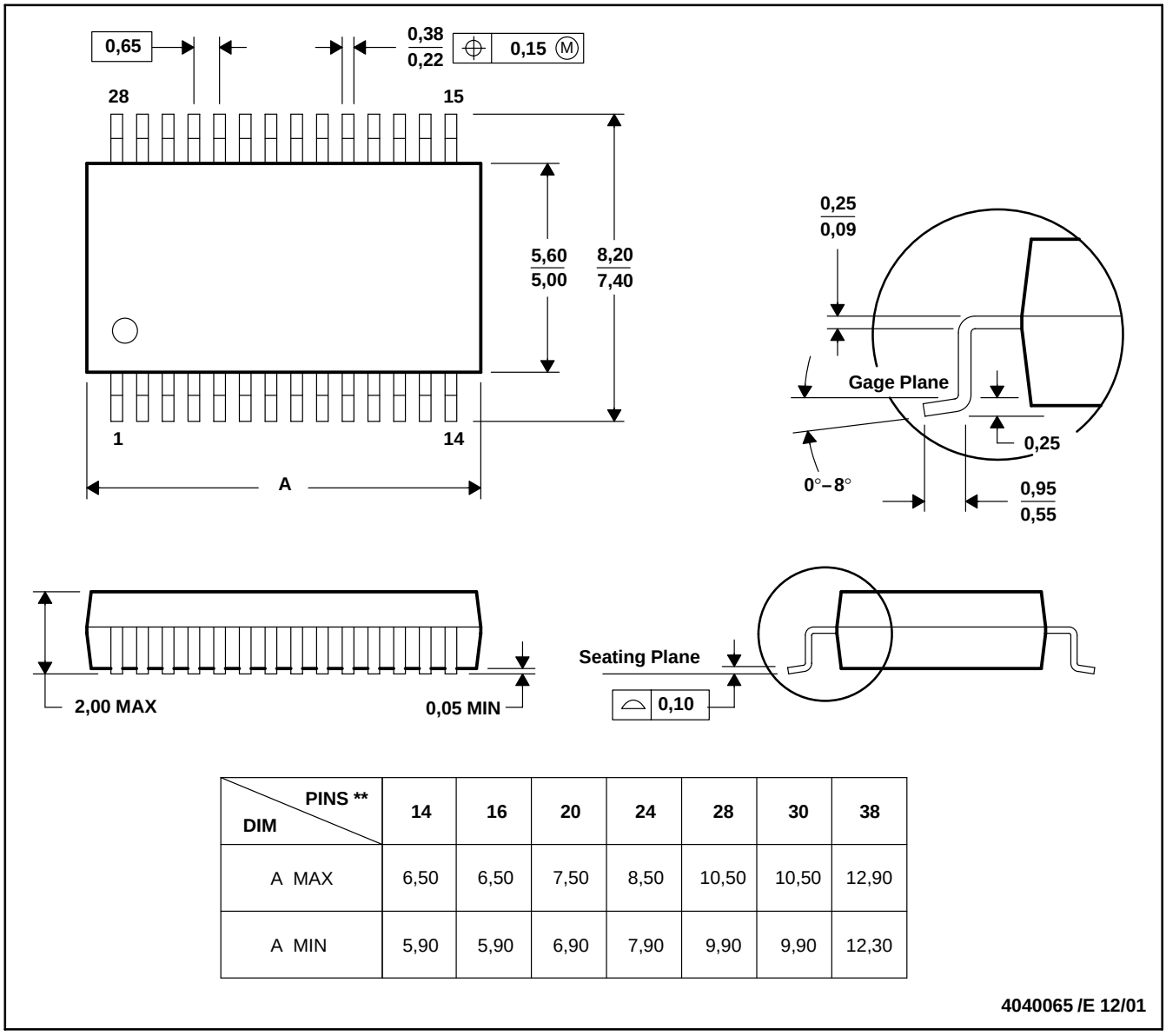

DIM \ PINS **	14	16	20	24	28	30	38
A MAX	6,50	6,50	7,50	8,50	10,50	10,50	12,90
A MIN	5,90	5,90	6,90	7,90	9,90	9,90	12,30

4040065 /E 12/01

NOTES: A. All linear dimensions are in millimeters.
B. This drawing is subject to change without notice.
C. Body dimensions do not include mold flash or protrusion not to exceed 0,15.
D. Falls within JEDEC MO-150

Downloaded from DatasheetLib.com - datasheet search engine

PW (R-PDSO-G)** **PLASTIC SMALL-OUTLINE PACKAGE**

14 PINS SHOWN

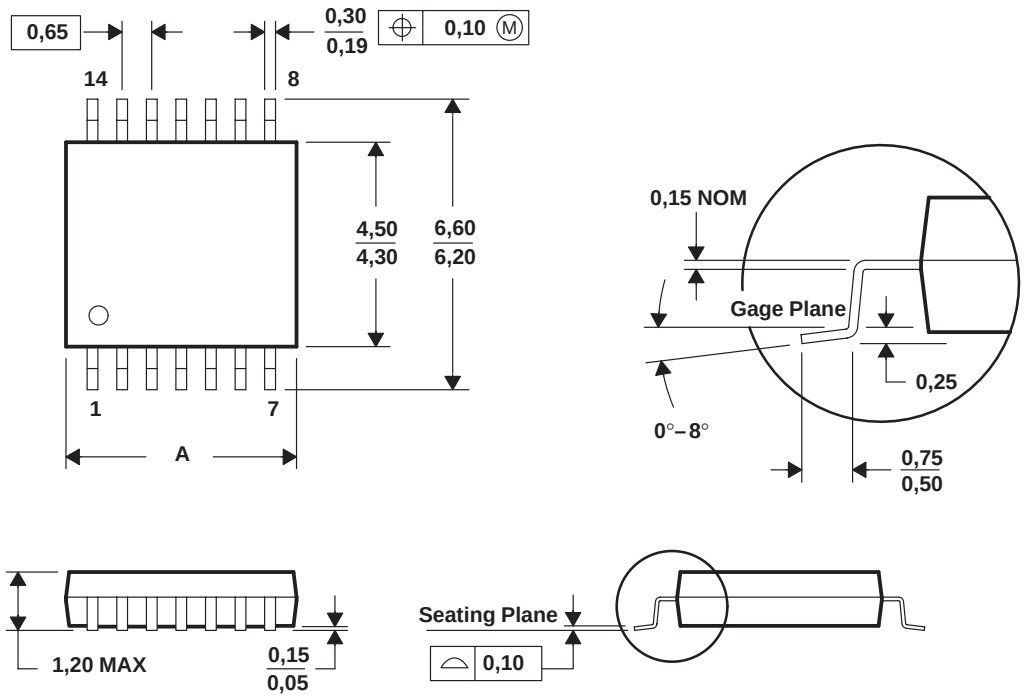

DIM \ PINS **	8	14	16	20	24	28
A MAX	3,10	5,10	5,10	6,60	7,90	9,80
A MIN	2,90	4,90	4,90	6,40	7,70	9,60

4040064/F 01/97

NOTES: A. All linear dimensions are in millimeters.
B. This drawing is subject to change without notice.
C. Body dimensions do not include mold flash or protrusion not to exceed 0,15.
D. Falls within JEDEC MO-153

Downloaded from DatasheetLib.com - datasheet search engine

RGT (S–PVQFN–N16) PLASTIC QUAD FLATPACK NO–LEAD

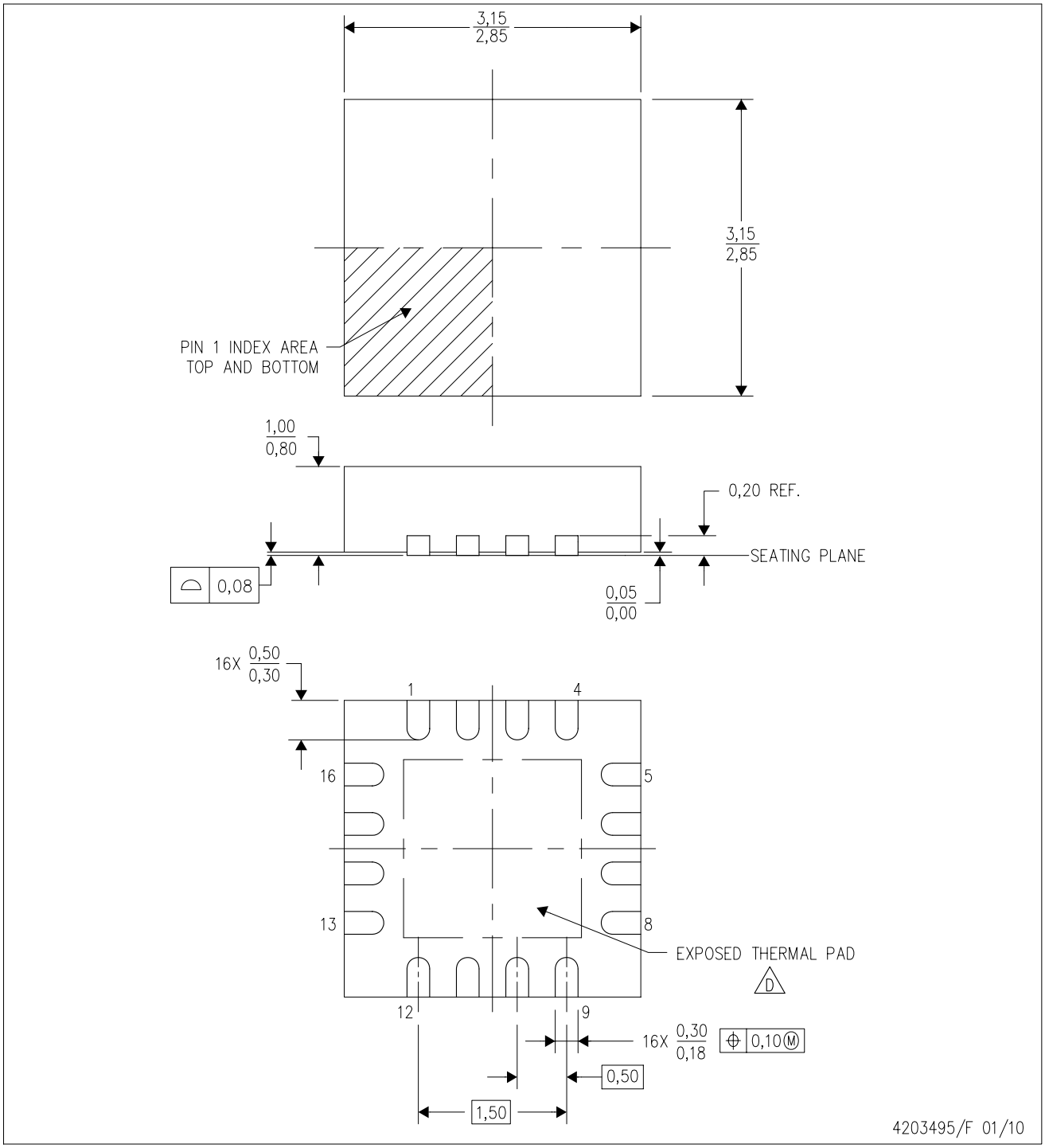

NOTES:
A. All linear dimensions are in millimeters. Dimensioning and tolerancing per ASME Y14.5M–1994.
B. This drawing is subject to change without notice.
C. Quad Flatpack, No–leads (QFN) package configuration.
D. The package thermal pad must be soldered to the board for thermal and mechanical performance. See the Product Data Sheet for details regarding the exposed thermal pad dimensions.
E. Falls within JEDEC MO–220.

Downloaded from DatasheetLib.com - datasheet search engine

THERMAL PAD MECHANICAL DATA

RGT (S–PVQFN–N16)

THERMAL INFORMATION

This package incorporates an exposed thermal pad that is designed to be attached directly to an external heatsink. The thermal pad must be soldered directly to the printed circuit board (PCB). After soldering, the PCB can be used as a heatsink. In addition, through the use of thermal vias, the thermal pad can be attached directly to the appropriate copper plane shown in the electrical schematic for the device, or alternatively, can be attached to a special heatsink structure designed into the PCB. This design optimizes the heat transfer from the integrated circuit (IC).

For information on the Quad Flatpack No–Lead (QFN) package and its advantages, refer to Application Report, Quad Flatpack No–Lead Logic Packages, Texas Instruments Literature No. SCBA017. This document is available at www.ti.com.

The exposed thermal pad dimensions for this package are shown in the following illustration.

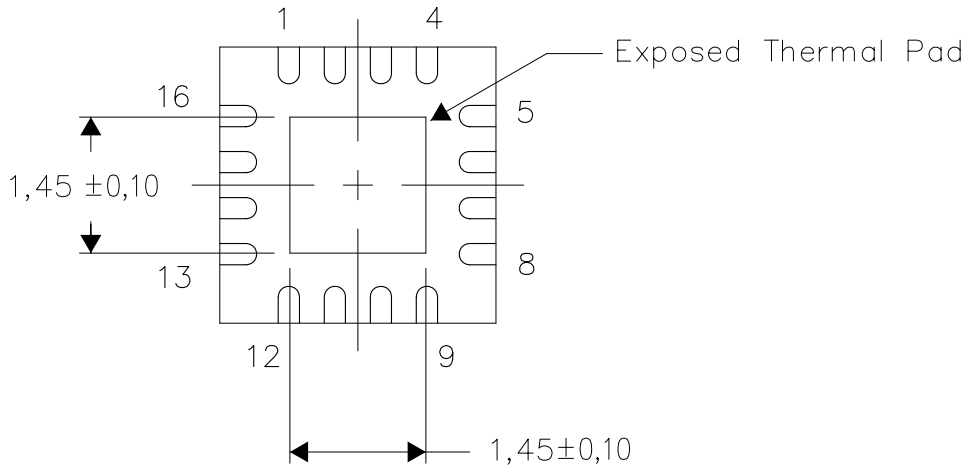

Bottom View

NOTE: All linear dimensions are in millimeters

Exposed Thermal Pad Dimensions

Downloaded from DatasheetLib.com - datasheet search engine

RGT (S–PVQFN–N16)

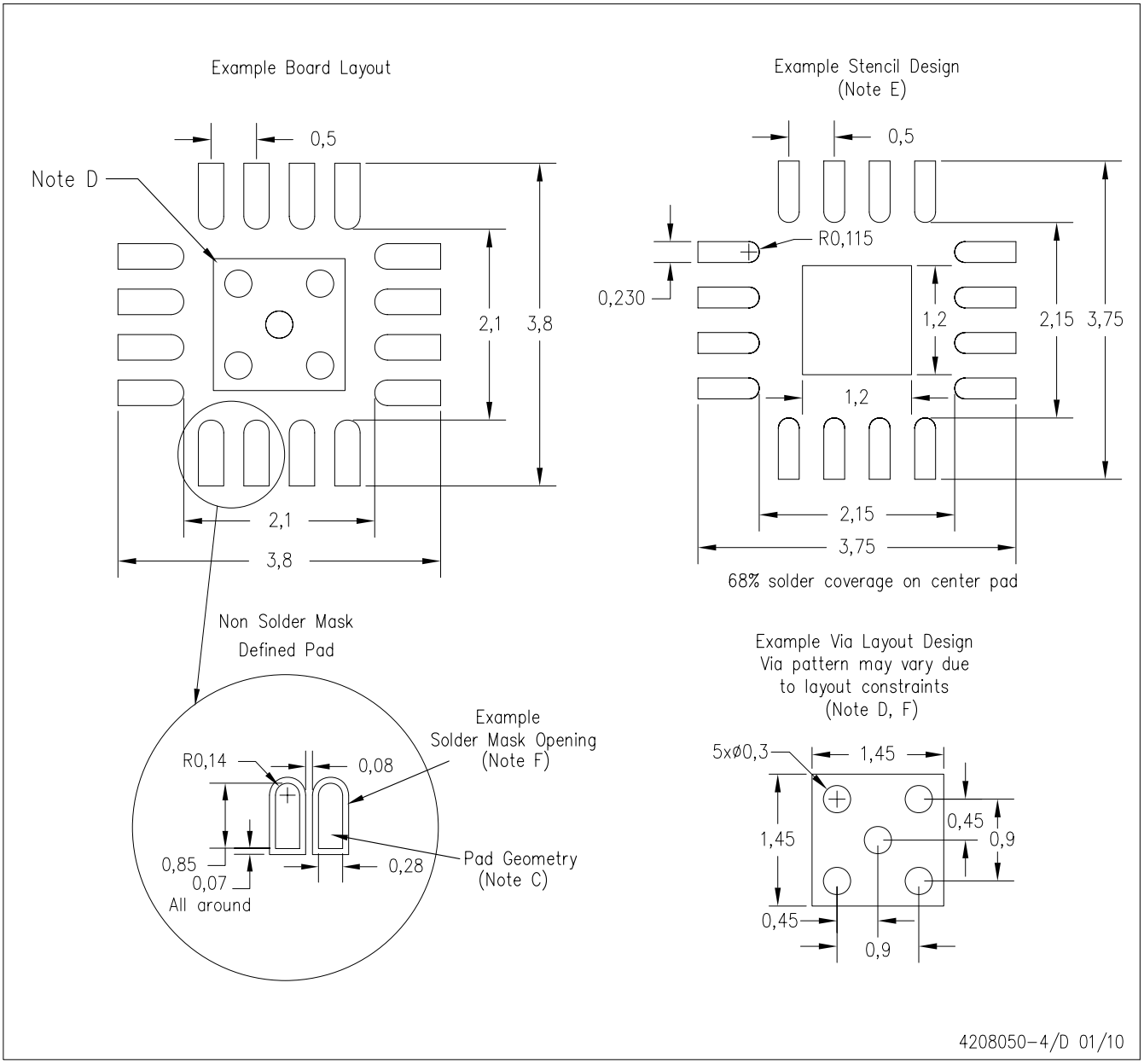

NOTES:
A. All linear dimensions are in millimeters.
B. This drawing is subject to change without notice.
C. Publication IPC–7351 is recommended for alternate designs.
D. This package is designed to be soldered to a thermal pad on the board. Refer to Application Note, QFN/SON PCB Attachment, Texas Instruments Literature No. SLUA271, and also the Product Data Sheets for specific thermal information, via requirements, and recommended board layout. These documents are available at www.ti.com <http://www.ti.com>.
E. Laser cutting apertures with trapezoidal walls and also rounding corners will offer better paste release. Customers should contact their board assembly site for stencil design recommendations. Refer to IPC 7525 for stencil design considerations.
F. Customers should contact their board fabrication site for minimum solder mask web tolerances between signal pads.

Downloaded from DatasheetLib.com - datasheet search engine

RGV (S–PQFP–N16) PLASTIC QUAD FLATPACK

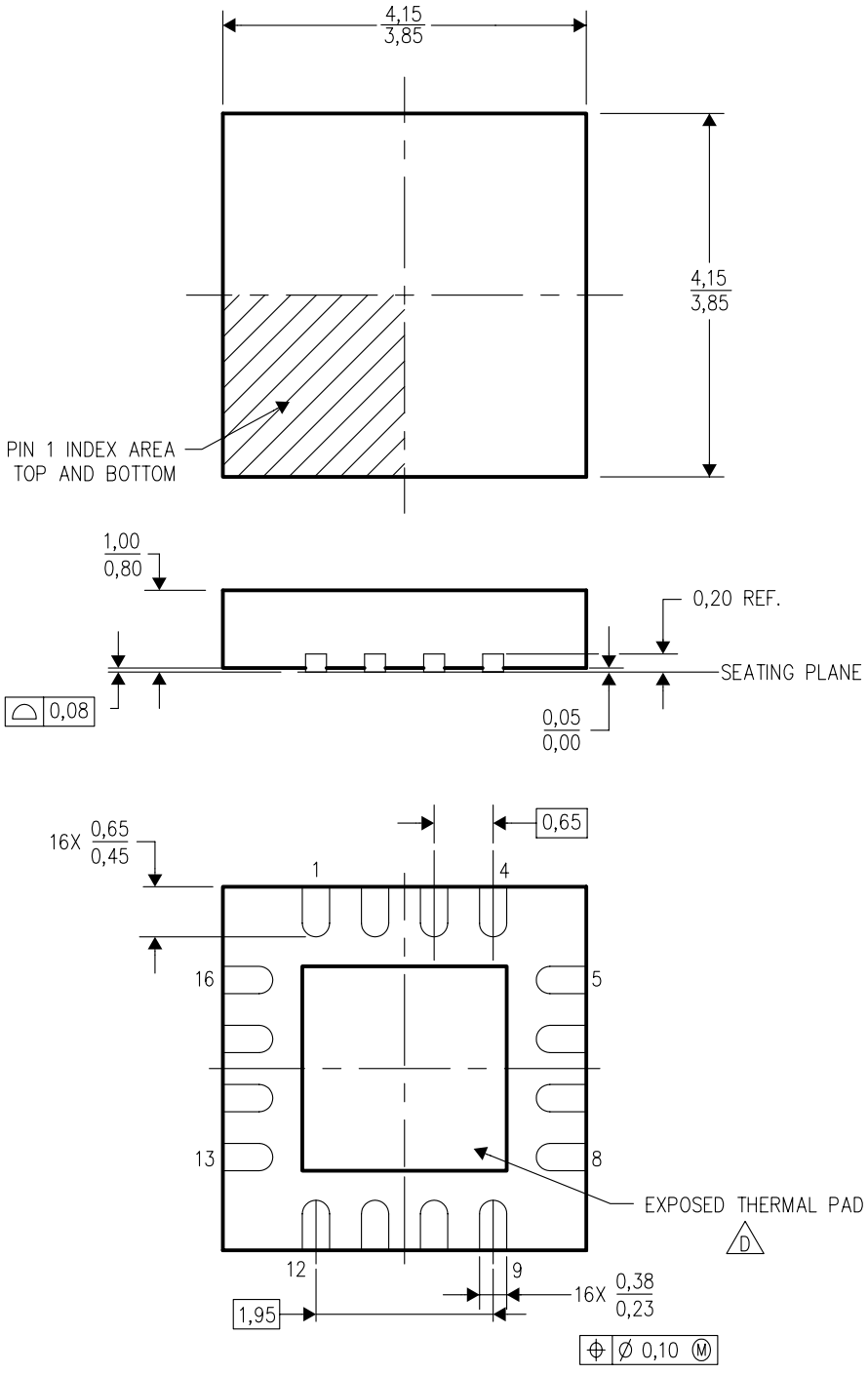

NOTES:
A. All linear dimensions are in millimeters. Dimensioning and tolerancing per ASME Y14.5M–1994.
B. This drawing is subject to change without notice.
C. Quad Flatpack, No–leads (QFN) package configuration.
D. The package thermal pad must be soldered to the board for thermal and mechanical performance. See the Product Data Sheet for details regarding the exposed thermal pad dimensions.
E. Falls within JEDEC MO–220.

Downloaded from DatasheetLib.com - datasheet search engine

THERMAL PAD MECHANICAL DATA

RGV (S–PVQFN–N16)

THERMAL INFORMATION

This package incorporates an exposed thermal pad that is designed to be attached directly to an external heatsink. The thermal pad must be soldered directly to the printed circuit board (PCB). After soldering, the PCB can be used as a heatsink. In addition, through the use of thermal vias, the thermal pad can be attached directly to the appropriate copper plane shown in the electrical schematic for the device, or alternatively, can be attached to a special heatsink structure designed into the PCB. This design optimizes the heat transfer from the integrated circuit (IC).

For information on the Quad Flatpack No–Lead (QFN) package and its advantages, refer to Application Report, QFN/SON PCB Attachment, Texas Instruments Literature No. SLUA271. This document is available at www.ti.com.

The exposed thermal pad dimensions for this package are shown in the following illustration.

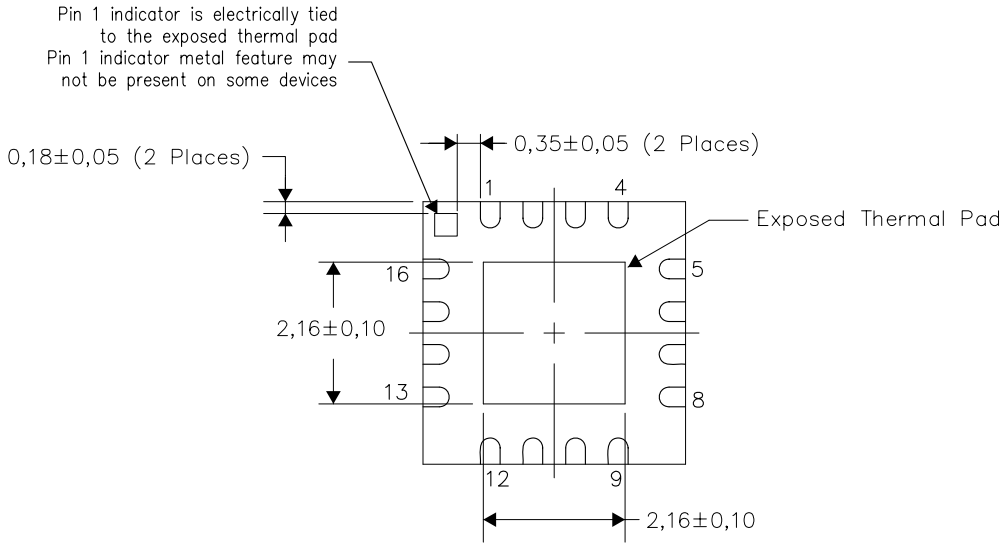

Bottom View

NOTE: All linear dimensions are in millimeters

Exposed Thermal Pad Dimensions

Downloaded from DatasheetLib.com - datasheet search engine

RGV (S–PVQFN–N16)

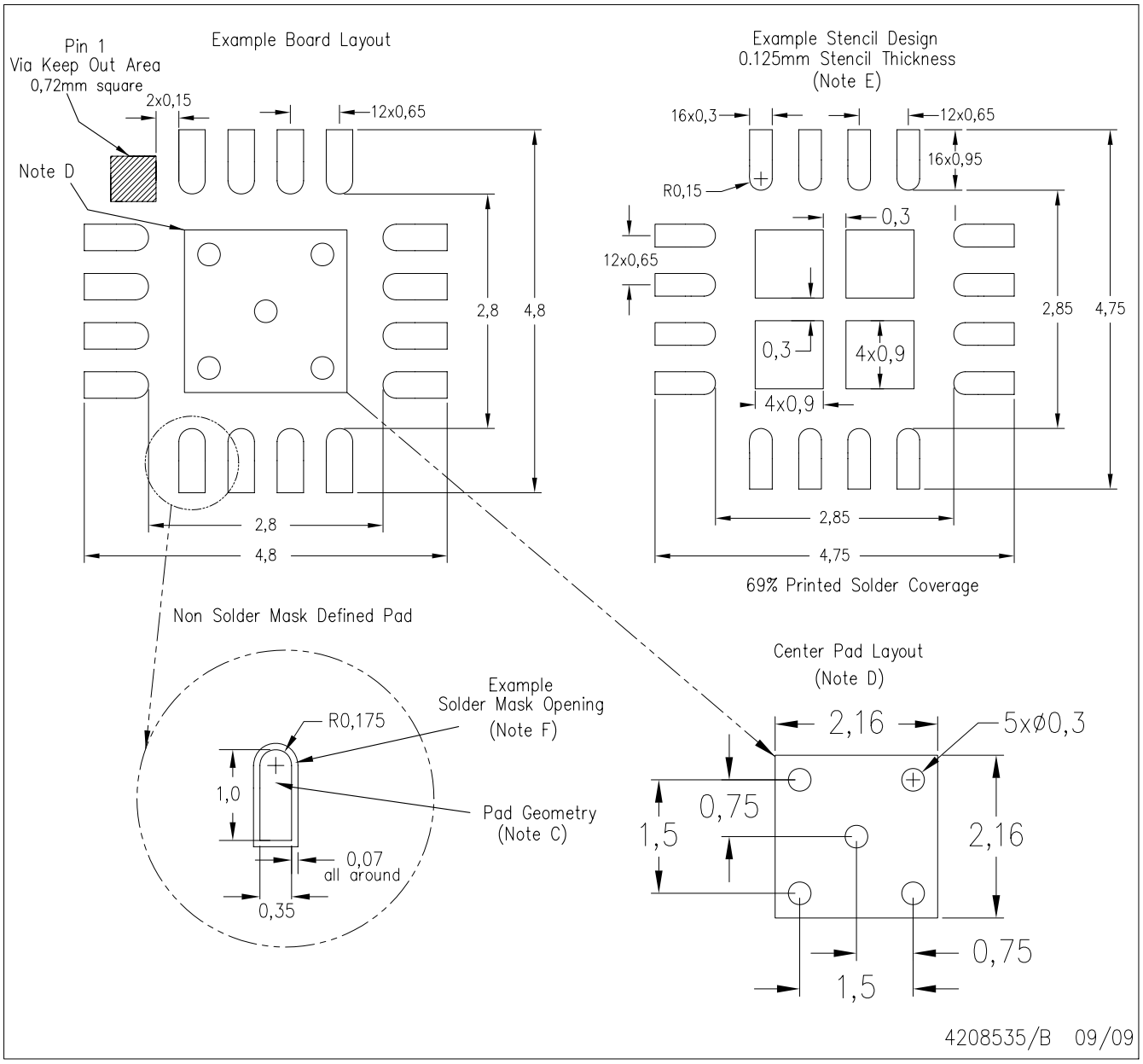

NOTES:
A. All linear dimensions are in millimeters.
B. This drawing is subject to change without notice.
C. Publication IPC–7351 is recommended for alternate designs.
D. This package is designed to be soldered to a thermal pad on the board. Refer to Application Note, QFN Packages, Texas Instruments Literature No. SLUA271, and also the Product Data Sheets for specific thermal information, via requirements, and recommended board layout. These documents are available at www.ti.com <http://www.ti.com>.
E. Laser cutting apertures with trapezoidal walls and also rounding corners will offer better paste release. Customers should contact their board assembly site for stencil design recommendations. Refer to IPC 7525 for stencil design considerations.
F. Customers should contact their board fabrication site for solder mask tolerances.

Downloaded from DatasheetLib.com - datasheet search engine

DW (R–PDSO–G16) PLASTIC SMALL–OUTLINE PACKAGE

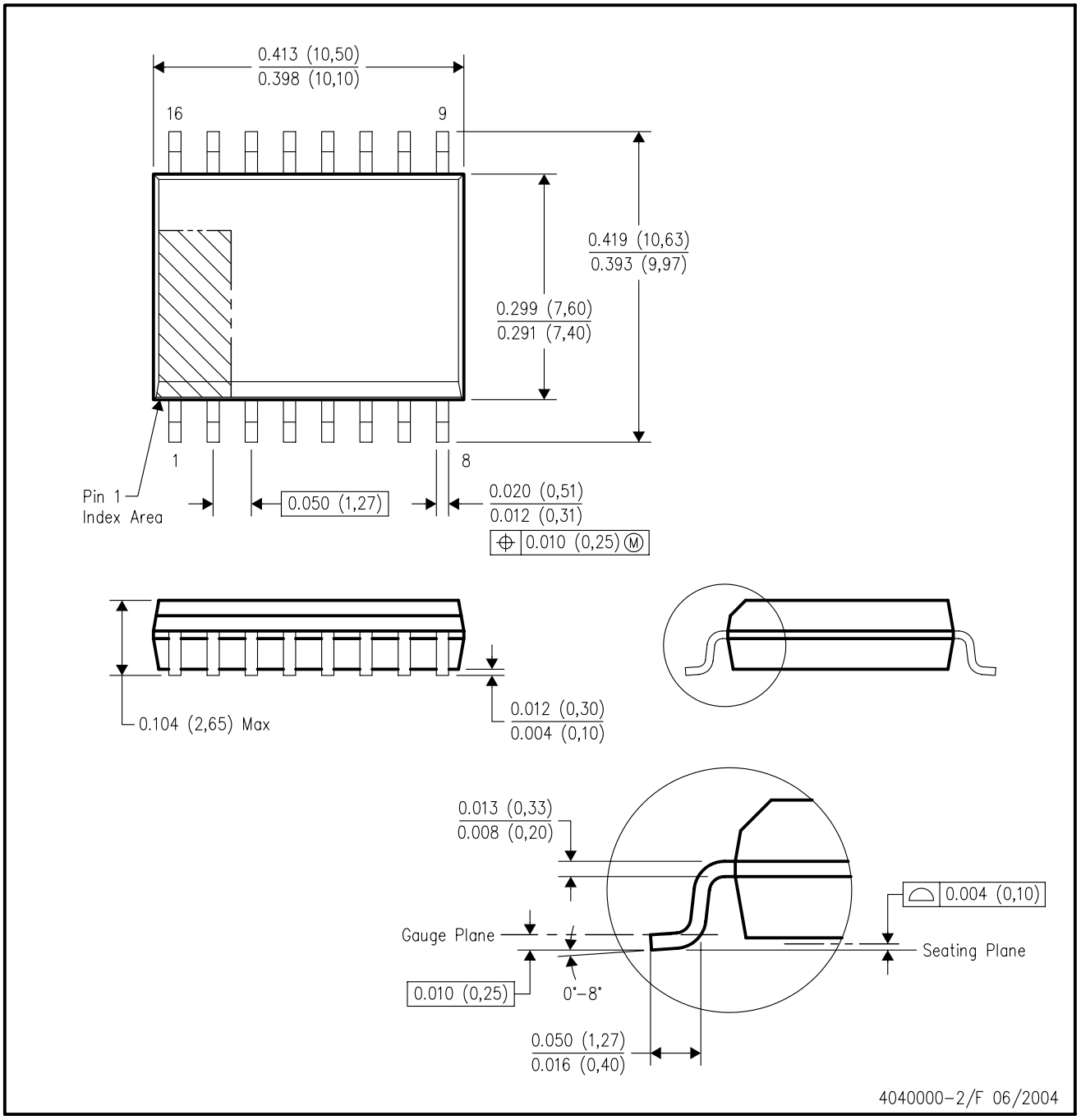

NOTES:
A. All linear dimensions are in inches (millimeters).
B. This drawing is subject to change without notice.
C. Body dimensions do not include mold flash or protrusion not to exceed 0.006 (0,15).
D. Falls within JEDEC MS–013 variation AA.

Downloaded from DatasheetLib.com - datasheet search engine

IMPORTANT NOTICE

Texas Instruments Incorporated and its subsidiaries (TI) reserve the right to make corrections, modifications, enhancements, improvements, and other changes to its products and services at any time and to discontinue any product or service without notice. Customers should obtain the latest relevant information before placing orders and should verify that such information is current and complete. All products are sold subject to TI's terms and conditions of sale supplied at the time of order acknowledgment.

TI warrants performance of its hardware products to the specifications applicable at the time of sale in accordance with TI's standard warranty. Testing and other quality control techniques are used to the extent TI deems necessary to support this warranty. Except where mandated by government requirements, testing of all parameters of each product is not necessarily performed.

TI assumes no liability for applications assistance or customer product design. Customers are responsible for their products and applications using TI components. To minimize the risks associated with customer products and applications, customers should provide adequate design and operating safeguards.

TI does not warrant or represent that any license, either express or implied, is granted under any TI patent right, copyright, mask work right, or other TI intellectual property right relating to any combination, machine, or process in which TI products or services are used. Information published by TI regarding third-party products or services does not constitute a license from TI to use such products or services or a warranty or endorsement thereof. Use of such information may require a license from a third party under the patents or other intellectual property of the third party, or a license from TI under the patents or other intellectual property of TI.

Reproduction of TI information in TI data books or data sheets is permissible only if reproduction is without alteration and is accompanied by all associated warranties, conditions, limitations, and notices. Reproduction of this information with alteration is an unfair and deceptive business practice. TI is not responsible or liable for such altered documentation. Information of third parties may be subject to additional restrictions.

Resale of TI products or services with statements different from or beyond the parameters stated by TI for that product or service voids all express and any implied warranties for the associated TI product or service and is an unfair and deceptive business practice. TI is not responsible or liable for any such statements.

TI products are not authorized for use in safety-critical applications (such as life support) where a failure of the TI product would reasonably be expected to cause severe personal injury or death, unless officers of the parties have executed an agreement specifically governing such use. Buyers represent that they have all necessary expertise in the safety and regulatory ramifications of their applications, and acknowledge and agree that they are solely responsible for all legal, regulatory and safety-related requirements concerning their products and any use of TI products in such safety-critical applications, notwithstanding any applications-related information or support that may be provided by TI. Further, Buyers must fully indemnify TI and its representatives against any damages arising out of the use of TI products in such safety-critical applications.

TI products are neither designed nor intended for use in military/aerospace applications or environments unless the TI products are specifically designated by TI as military-grade or "enhanced plastic." Only products designated by TI as military-grade meet military specifications. Buyers acknowledge and agree that any such use of TI products which TI has not designated as military-grade is solely at the Buyer's risk, and that they are solely responsible for compliance with all legal and regulatory requirements in connection with such use.

TI products are neither designed nor intended for use in automotive applications or environments unless the specific TI products are designated by TI as compliant with ISO/TS 16949 requirements. Buyers acknowledge and agree that, if they use any non-designated products in automotive applications, TI will not be responsible for any failure to meet such requirements.

Following are URLs where you can obtain information on other Texas Instruments products and application solutions:

Products		**Applications**	
Amplifiers	amplifier.ti.com	Audio	www.ti.com/audio
Data Converters	dataconverter.ti.com	Automotive	www.ti.com/automotive
DLP® Products	www.dlp.com	Communications and Telecom	www.ti.com/communications
DSP	dsp.ti.com	Computers and Peripherals	www.ti.com/computers
Clocks and Timers	www.ti.com/clocks	Consumer Electronics	www.ti.com/consumer-apps
Interface	interface.ti.com	Energy	www.ti.com/energy
Logic	logic.ti.com	Industrial	www.ti.com/industrial
Power Mgmt	power.ti.com	Medical	www.ti.com/medical
Microcontrollers	microcontroller.ti.com	Security	www.ti.com/security
RFID	www.ti-rfid.com	Space, Avionics & Defense	www.ti.com/space-avionics-defense
RF/IF and ZigBee® Solutions	www.ti.com/lprf	Video and Imaging	www.ti.com/video
		Wireless	www.ti.com/wireless-apps

Mailing Address: Texas Instruments, Post Office Box 655303, Dallas, Texas 75265
Copyright © 2010, Texas Instruments Incorporated

Downloaded from DatasheetLib.com - datasheet search engine